SECTION EM
ENGINE MECHANICAL

CONTENTS

HR16DE

SYMPTOM DIAGNOSIS 6

NOISE, VIBRATION AND HARSHNESS (NVH) TROUBLESHOOTING 6
NVH Troubleshooting - Engine Noise 6
Use the Chart Below to Help You Find the Cause of the Symptom 6

PRECAUTION 8

PRECAUTIONS 8
Precaution for Procedure without Cowl Top Cover.....8
Precaution Necessary for Steering Wheel Rotation After Battery Disconnect 8
Draining Engine Coolant 8
Disconnecting Fuel Piping 8
Removal and Disassembly 8
Inspection, Repair and Replacement 9
Assembly and Installation 9
Parts Requiring Angle Tightening 9
Liquid Gasket 9

PREPARATION 11

PREPARATION 11
Special Service Tools 11
Commercial Service Tools 12

ON-VEHICLE MAINTENANCE 15

DRIVE BELTS 15
Checking 15
Tension Adjustment 15
Removal and Installation 16

AIR CLEANER FILTER 18
Removal and Installation 18

SPARK PLUG 19
Exploded View 19
Removal and Installation 19
Inspection 20

CAMSHAFT VALVE CLEARANCE 21
Inspection and Adjustment 21

COMPRESSION PRESSURE 24
Inspection 24

ON-VEHICLE REPAIR 25

DRIVE BELT IDLER PULLEY 25
Exploded View 25
Removal and Installation 25

AIR CLEANER AND AIR DUCT 27
Exploded View 27
Removal and Installation 27
Inspection 28

INTAKE MANIFOLD 29
Exploded View 29
Removal and Installation 29

EXHAUST MANIFOLD 32
Exploded View 32
Removal and Installation 32
Inspection 33

FUEL INJECTOR AND FUEL TUBE 35
Exploded View 35
Removal and Installation 35
Inspection 39

OIL PAN (LOWER) 40
Exploded View 40
Removal and Installation 40
Inspection 42

IGNITION COIL, SPARK PLUG AND ROCKER COVER 43
Exploded View 43
Removal and Installation 43

cardiagn.com

TIMING CHAIN 46
Exploded View 46
Removal and Installation 46
Inspection 53

CAMSHAFT 55
Exploded View 55
Removal and Installation 55
Inspection 65

OIL SEAL 71

VALVE OIL SEAL 71
VALVE OIL SEAL : Removal and Installation 71

FRONT OIL SEAL 71
FRONT OIL SEAL : Removal and Installation 71

REAR OIL SEAL 72
REAR OIL SEAL : Removal and Installation 72

CYLINDER HEAD 74
Exploded View 74
Removal and Installation 75
Disassembly and Assembly 76
Inspection 80

REMOVAL AND INSTALLATION 83

ENGINE ASSEMBLY 83
Exploded View 83
Removal and Installation 83
Inspection 86

DISASSEMBLY AND ASSEMBLY 87

ENGINE STAND SETTING 87
Setting 87

ENGINE UNIT 88
Disassembly 88
Assembly 88

OIL PAN (UPPER) 89
Exploded View 89
Removal and Installation 89
Inspection 92

CYLINDER BLOCK 93
Exploded View 93
Disassembly and Assembly 94
Inspection 101

HOW TO SELECT PISTON AND BEARING .. 110
Description 110
Connecting Rod Bearing 110
Main Bearing 112

SERVICE DATA AND SPECIFICATIONS (SDS) 115

SERVICE DATA AND SPECIFICATIONS (SDS) 115
General Specification 115
Drive Belts 115
Spark Plug 116
Exhaust Manifold 116
Camshaft 116
Cylinder Head 118
Cylinder Block 120
Connecting Rod Bearing 123
Main Bearing 124

MR20DE

SYMPTOM DIAGNOSIS 125

NOISE, VIBRATION AND HARSHNESS (NVH) TROUBLESHOOTING 125
NVH troubleshooting Chart 125

PRECAUTION 127

PRECAUTIONS 127
Precaution for Procedure without Cowl Top Cover. 127
Precaution Necessary for Steering Wheel Rotation After Battery Disconnect 127
Draining Engine Coolant 127
Disconnecting Fuel Piping 127
Removal and Disassembly 127
Inspection, Repair and Replacement 128
Assembly and Installation 128
Parts Requiring Angle Tightening 128
Liquid Gasket 128

PREPARATION 130

PREPARATION 130
Special Service Tools 130
Commercial Service Tools 131

ON-VEHICLE MAINTENANCE 134

DRIVE BELTS 134
Exploded View 134
Checking 134
Tension Adjustment 134
Removal and Installation 134

AIR CLEANER FILTER 136
Removal and Installation 136

SPARK PLUG 137
Exploded View 137
Removal and Installation 137
Inspection 138

CAMSHAFT VALVE CLEARANCE 139
Inspection and Adjustment 139

COMPRESSION PRESSURE 142
Inspection 142

cardiagn.com

ON-VEHICLE REPAIR 143

DRIVE BELT AUTO-TENSIONER 143
Exploded View 143
Removal and Installation 143

AIR CLEANER AND AIR DUCT 144
Exploded View 144
Removal and Installation 144
Inspection 145

INTAKE MANIFOLD 146
Exploded View 146
Removal and Installation 146

EXHAUST MANIFOLD 149
Exploded View 149
Removal and Installation 149
Inspection 150

OIL PAN (LOWER) 152
Exploded View 152
Removal and Installation 152
Inspection 154

FUEL INJECTOR AND FUEL TUBE 155
Exploded View 155
Removal and Installation 155
Inspection 158

IGNITION COIL , SPRAK PLUG AND ROCKER COVER 160
Exploded View 160
Removal and Installation 160

TIMING CHAIN 162
Exploded View 162
Removal and Installation 163
Inspection 171

CAMSHAFT 173
Exploded View 173
Removal and Installation 173
Inspection 177

OIL SEAL 182

VALVE OIL SEAL 182
VALVE OIL SEAL : Removal and Installation 182

FRONT OIL SEAL 182
FRONT OIL SEAL : Removal and Installation 182

REAR OIL SEAL 183
REAR OIL SEAL : Removal and Installation 183

CYLINDER HEAD 185
Exploded View 185
Removal and Installation 186
Disassembly and Assembly 187
Inspection 191

REMOVAL AND INSTALLATION 194

ENGINE ASSEMBLY 194

M/T 194
M/T : Exploded View 194
M/T : Removal and Installation 195
M/T : Inspection 198

CVT 198
CVT : Exploded View 198
CVT : Removal and Installation 199
CVT : Inspection 202

DISASSEMBLY AND ASSEMBLY 203

ENGINE STAND SETTING 203
Setting 203

ENGINE UNIT 205
Disassembly 205
Assembly 205

OIL PAN (UPPER) 206
Exploded View 206
Removal and Installation 206
Inspection 209

CYLINDER BLOCK 210
Exploded View 210
Disassembly and Assembly 211
Inspection 219

HOW TO SELECT PISTON AND BEARING 229
Description 229
Piston 229
Connecting Rod Bearing 230
Main Bearing 232

SERVICE DATA AND SPECIFICATIONS (SDS) 236

SERVICE DATA AND SPECIFICATIONS (SDS) 236
General Specification 236
Drive Belt 236
Spark Plug 236
Exhaust Manifold 236
Camshaft 237
Cylinder Head 238
Cylinder Block 241
Connecting Rod Bearing 244
Main Bearing 245

K9K

SYMPTOM DIAGNOSIS 246

NOISE, VIBRATION AND HARSHNESS (NVH) TROUBLESHOOTING 246
NVH Troubleshooting - Engine Noise 246

cardiagn.com

Use the Chart Below to Help You Find the Cause of the Symptom 246

PRECAUTION 248

PRECAUTIONS 248
Precaution for Drain Coolant 248
Precaution for Disconnecting Fuel Piping 248
Precaution for Removal and Disassembly 248
Precaution for Inspection, Repair and Replacement 248
Precaution for Assembly and Installation 248
Parts Requiring Angular Tightening 248
Precaution for Liquid Gasket 248
Precaution for Diesel Equipment 249
Installation of Thread Inserts 253

PREPARATION 254

PREPARATION 254
Special Service Tools 254
Commercial Service Tools 256

ON-VEHICLE MAINTENANCE 259

DRIVE BELTS 259
Exploded View 259
Inspection and Adjustment 259
Removal and Installation 259

AIR CLEANER FILTER 261
Removal and Installation 261

CAMSHAFT VALVE CLEARANCE 262
Inspection and Adjustment 262

COMPRESSION PRESSURE 263
Inspection 263

ON-VEHICLE REPAIR 264

DRIVE BELT AUTO-TENSIONER 264
Exploded View 264
Removal and Installation 264

AIR CLEANER AND AIR DUCT 265
Exploded View 265
Removal and Installation 265

CHARGE AIR COOLER 266
Exploded View 266
Removal and Installation 266
Inspection 267

EGR SYSTEM 268
Exploded View 268
Removal and Installation 268

CATALYST 270
Exploded View 270
Removal and Installation 270
Inspection 270

TURBOCHARGER 271
Exploded View 271
Removal and Installation 271
Inspection 271

EXHAUST MANIFOLD 273
Exploded View 273
Removal and Installation 273
Inspection 274

GLOW PLUG 275
Exploded View 275
Removal and Installation 275

VACUUM PUMP 276
Exploded View 276
Removal and Installation 276
Inspection 276

INJECTION TUBE AND FUEL INJECTOR 277
Exploded View 277
Removal and Installation 277

OIL PAN 280
Exploded View 280
Removal and Installation 280
Inspection 282

HIGH PRESSURE SUPPLY PUMP 283
Exploded View 283
Removal and Installation 283

ROCKER COVER 285
Exploded View 285
Removal and Installation 285

TIMING BELT 287
Exploded View 287
Removal and Installation 287

CAMSHAFT 294
Exploded View 294
Removal and Installation 294
Inspection 296

REMOVAL AND INSTALLATION 298

ENGINE ASSEMBLY 298
Exploded View 298
Removal and Installation 298
Inspection 300

DISASSEMBLY AND ASSEMBLY 301

ENGINE STAND SETTING 301
Setting 301

CYLINDER HEAD 302
Exploded View 302
Removal and Installation 302
Disassembly and Assembly 303
Cleaning 306

cardiagn.com

Inspection 307

CYLINDER BLOCK 310
Exploded View 310
Disassembly and Assembly 310
Inspection 326

SERVICE DATA AND SPECIFICATIONS (SDS) 329

SERVICE DATA AND SPECIFICATIONS (SDS) 329
General Specification 329
Drive Belt 329
Camshaft 329
Cylinder Head 331
Cylinder Block 333
Turbocharger 335

cardiagn.com

SYMPTOM DIAGNOSIS

NOISE, VIBRATION AND HARSHNESS (NVH) TROUBLESHOOTING

NVH Troubleshooting - Engine Noise

INFOID:0000000000894012

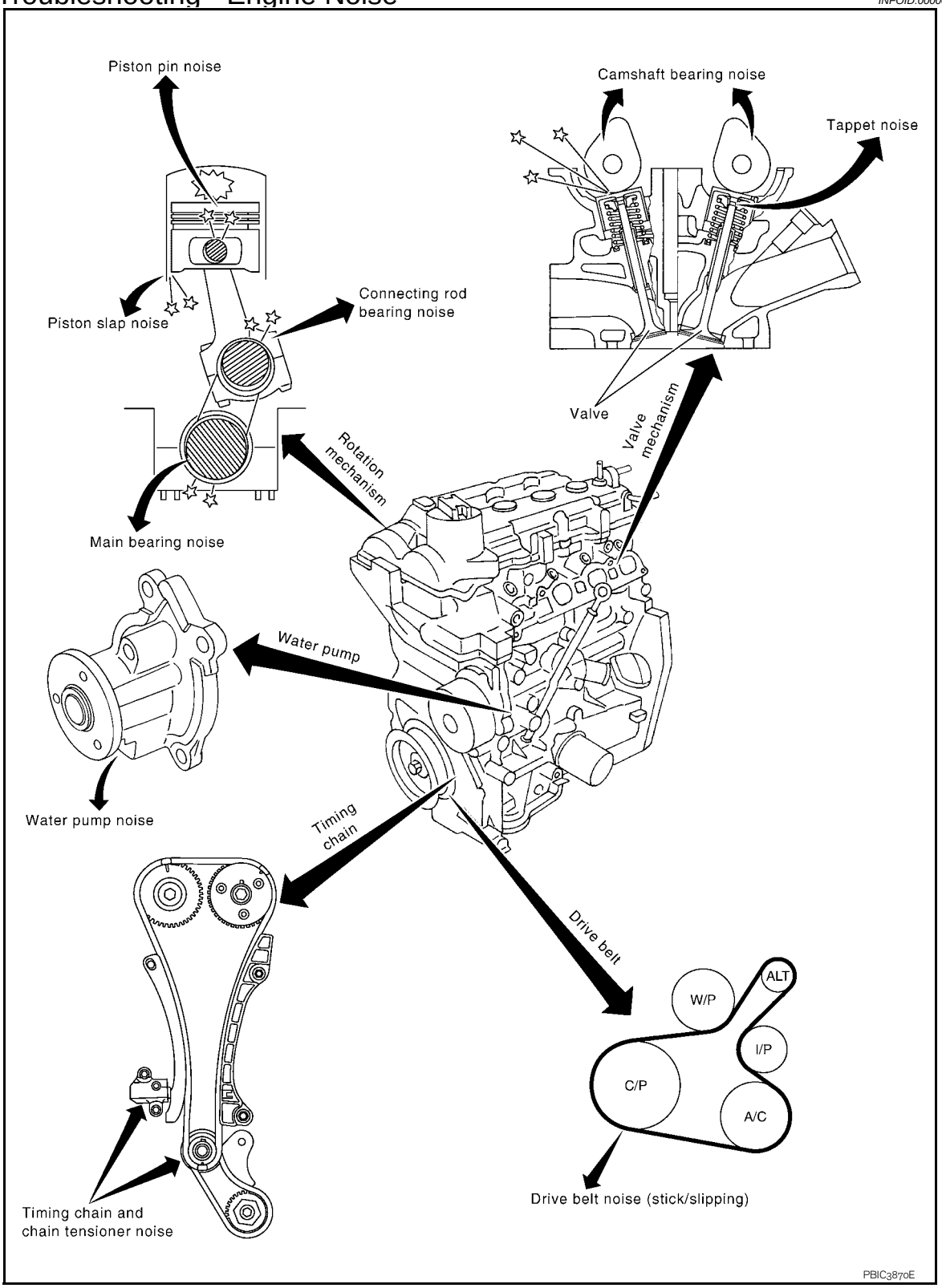

Use the Chart Below to Help You Find the Cause of the Symptom

INFOID:0000000000894013

cardiagn.com

1. Locate the area where noise occurs.
2. Confirm the type of noise.
3. Specify the operating condition of engine.
4. Check specified noise source.

If necessary, repair or replace these parts.

Location of noise	Type of noise	Operating condition of engine						Source of noise	Check item	Reference page
		Before warm-up	After warm-up	When starting	When idling	When racing	While driving			
Top of engine Rocker cover Cylinder head	Ticking or clicking	C	A	—	A	B	—	Tappet noise	Valve clearance	EM-21
	Rattle	C	A	—	A	B	C	Camshaft bearing noise	Camshaft journal oil clearance Camshaft runout	EM-116 EM-116
Crankshaft pulley Cylinder block (Side of engine) Oil pan	Slap or knock	—	A	—	B	B	—	Piston pin noise	Piston to piston pin oil clearance Connecting rod small end clearance	EM-120 EM-123
	Slap or rap	A	—	—	B	B	A	Piston slap noise	Piston to cylinder bore clearance Piston ring side clearance Piston ring end gap Connecting rod bend and torsion	EM-120 EM-120 EM-120 EM-123
	Knock	A	B	C	B	B	B	Connecting rod bearing noise	Connecting rod small end clearance Connecting rod bearing oil clearance	EM-120 EM-123
	Knock	A	B	—	A	B	C	Main bearing noise	Main bearing oil clearance Crankshaft runout	EM-124 EM-120
Front of engine Front cover	Tapping or ticking	A	A	—	B	B	B	Timing chain and chain tensioner noise	Timing chain cracks and wear Timing chain tensioner operation	EM-53
Front of engine	Squeaking or fizzing	A	B	—	B	—	C	Drive belt (Sticking or slipping)	Drive belt deflection	EM-115
	Creaking	A	B	A	B	A	B	Drive belt (Slipping)	Idler pulley bearing operation	
	Squall Creak	A	B	—	B	A	B	Water pump noise	Water pump operation	CO-18

A: Closely related B: Related C: Sometimes related —: Not related

cardiagn.com

PRECAUTION

PRECAUTIONS

Precaution for Procedure without Cowl Top Cover

INFOID:0000000001117285

When performing the procedure after removing cowl top cover, cover the lower end of windshield with urethane, etc.

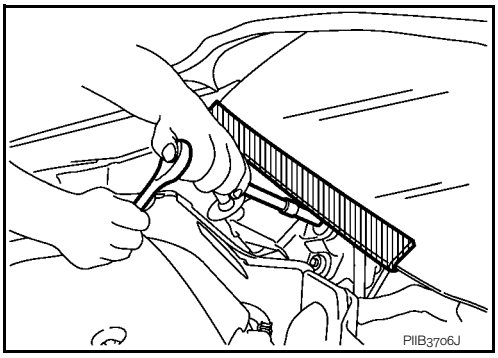

Precaution Necessary for Steering Wheel Rotation After Battery Disconnect

INFOID:0000000001117286

NOTE:
- This Procedure is applied only to models with Intelligent Key system and NATS (NISSAN ANTI-THEFT SYSTEM).
- Remove and install all control units after disconnecting both battery cables with the ignition knob in the ″LOCK″ position.
- Always use CONSULT-III to perform self-diagnosis as a part of each function inspection after finishing work. If DTC is detected, perform trouble diagnosis according to self-diagnostic results.

For models equipped with the Intelligent Key system and NATS, an electrically controlled steering lock mechanism is adopted on the key cylinder.
For this reason, if the battery is disconnected or if the battery is discharged, the steering wheel will lock and steering wheel rotation will become impossible.
If steering wheel rotation is required when battery power is interrupted, follow the procedure below before starting the repair operation.

OPERATION PROCEDURE

1. Connect both battery cables.
   NOTE:
   Supply power using jumper cables if battery is discharged.
2. Use the Intelligent Key or mechanical key to turn the ignition switch to the ″ACC″ position. At this time, the steering lock will be released.
3. Disconnect both battery cables. The steering lock will remain released and the steering wheel can be rotated.
4. Perform the necessary repair operation.
5. When the repair work is completed, return the ignition switch to the ″LOCK″ position before connecting the battery cables. (At this time, the steering lock mechanism will engage.)
6. Perform a self-diagnosis check of all control units using CONSULT-III.

Draining Engine Coolant

INFOID:0000000000893815

Drain engine coolant and engine oil when the engine is cooled.

Disconnecting Fuel Piping

INFOID:0000000000893816

- Before starting work, make sure no fire or spark producing items are in the work area.
- Release fuel pressure before disconnecting and disassembly.
- After disconnecting pipes, plug openings to stop fuel leakage.

Removal and Disassembly

INFOID:0000000000893817

cardiagn.com

- When instructed to use SST, use specified tools. Always be careful to work safely, avoid forceful or unin-structed operations.
- Exercise maximum care to avoid damage to mating or sliding surfaces.
- Dowel pins are used for several parts alignment. When replacing and reassembling parts with dowel pins, make sure that dowel pins are installed in the original position.
- Cover openings of engine system with a tape or equivalent, if necessary, to seal out foreign materials.
- Mark and arrange disassembly parts in an organized way for easy troubleshooting and re-assembly.
- When loosening nuts and bolts, as a basic rule, start with the one furthest outside, then the one diagonally opposite, and so on. If the order of loosening is specified, do exactly as specified. Power tools may be used in the step.

Inspection, Repair and Replacement

INFOID:0000000000893818

Before repairing or replacing, thoroughly inspect parts. Inspect new replacement parts in the same way, and replace if necessary.

Assembly and Installation

INFOID:0000000000893819

- Use torque wrench to tighten bolts or nuts to specification.
- When tightening nuts and bolts, as a basic rule, equally tighten in several different steps starting with the ones in center, then ones on inside and outside diagonally in this order. If the order of tightening is specified, do exactly as specified.
- Replace with new gasket, packing, oil seal or O-ring.
- Thoroughly wash, clean, and air-blow each part. Carefully check engine oil or engine coolant passages for any restriction and blockage.
- Avoid damaging sliding or mating surfaces. Completely remove foreign materials such as cloth lint or dust. Before assembly, oil sliding surfaces well.
- Release air within route when refilling after draining engine coolant.
- After repairing, start the engine and increase engine speed to check engine coolant, fuel, engine oil, and exhaust gases for leakage.

Parts Requiring Angle Tightening

INFOID:0000000000893820

- Use the angle wrench [SST: KV10112100] for the final tightening of the following engine parts:
- Cylinder head bolts
- Main bearing cap bolts
- Connecting rod cap bolts
- Crankshaft pulley bolt (No the angle wrench is required as bolt flange is provided with notches for angle tightening)
- Never use a torque value for final tightening.
- The torque value for these parts are for a preliminary step.
- Ensure thread and seat surfaces are clean and coated with engine oil.

Liquid Gasket

INFOID:0000000000893821

REMOVAL OF LIQUID GASKET

- After removing the mounting bolts and nuts, separate the mating surface using seal cutter (SST) and remove the old liquid gasket sealing.
  CAUTION:
  Be careful not to damage the mating surfaces.
- Tap seal cutter to insert it (1), and then slide it (2) by tapping on the side as shown in the figure.
- In areas where seal cutter is difficult to use, use plastic hammer to lightly tap the parts, to remove it.
  CAUTION:
  If for some unavoidable reason tool such as screwdriver is used, be careful not to damage the mating surfaces.

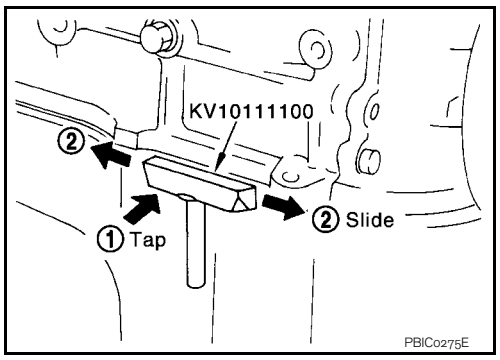

LIQUID GASKET APPLICATION PROCEDURE

cardiagn.com

1. Using a scraper, remove the old liquid gasket adhering to the liquid gasket application surface and the mating surface.
   - Remove the liquid gasket completely from the groove of the liquid gasket application surface, mounting bolts and bolt holes.
2. Wipe the liquid gasket application surface and the mating surface with white gasoline (lighting and heating use) to remove adhering moisture, grease and foreign materials.

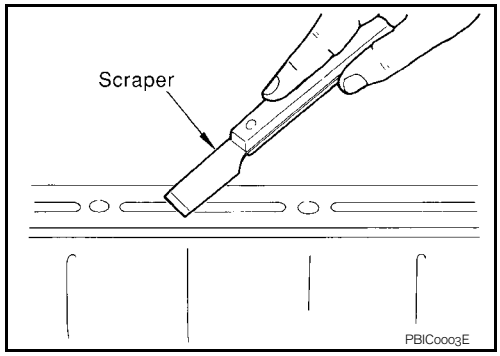

3. Attach liquid gasket tube to the tube presser (commercial service tool).
   Use Genuine Liquid Gasket or equivalent.
4. Apply the liquid gasket without breaks to the specified location with the specified dimensions.
   - If there is a groove for the liquid gasket application, apply the liquid gasket to the groove.

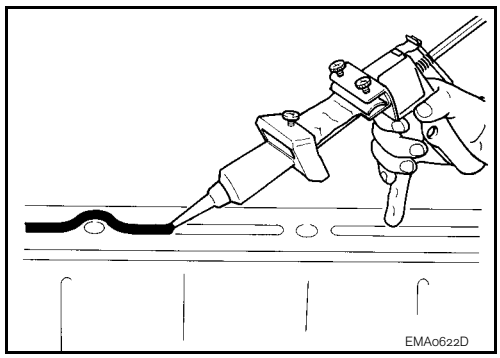

- As for the bolt holes, normally apply the liquid gasket inside the holes. Occasionally, it should be applied outside the holes. Make sure to read the text of service manual.
- Within 5 minutes of liquid gasket application, install the mating component.
- If the liquid gasket protrudes, wipe it off immediately.
- Do not retighten mounting bolts or nut after the installation.
- Wait 30 minutes or more after installation before refilling engine oil and engine coolant.

CAUTION:
If there are specific instructions in this manual, observe them.

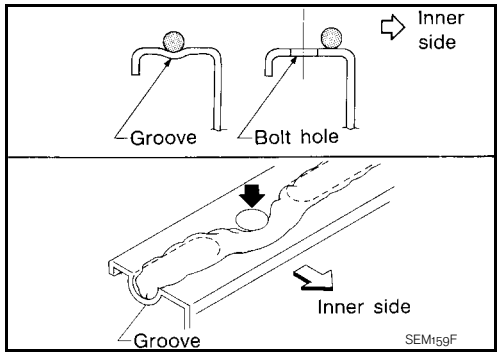

cardiagn.com

PREPARATION

PREPARATION

Special Service Tools

INFOID:0000000000893822

Tool number Tool name		Description
KV10111100 Seal cutter	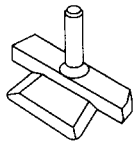 S-NT046	Removing oil pan (lower and upper) etc.
KV10116200 Valve spring compressor 1. KV10115900 Attachment 2. KV10109220 Adapter	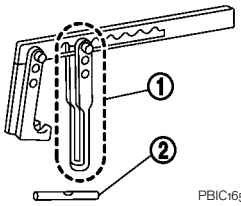 PBIC1650E	Disassembling and assembling valve mechanism Part (1) is a component of KV10116200, but Part (2) is not so.
KV10112100 Angle wrench	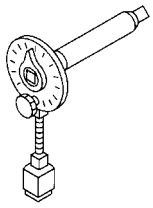 S-NT014	Tightening bolts for bearing cap, cylinder head, etc. in angle
KV10117100 Heated oxygen sensor wrench	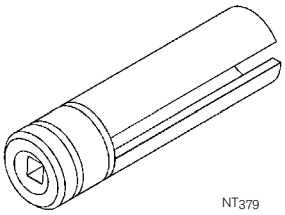 NT379	Loosening or tightening heated oxygen sensor 1 **For 22 mm (0.87 in) width hexagon nut**
KV10107902 Valve oil seal puller 1. KV10116100 Valve oil seal puller adapter	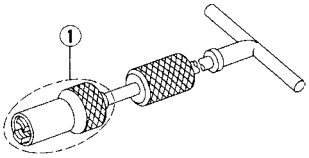 SZNT605	Removing valve oil seal
KV10115600 Valve oil seal drift	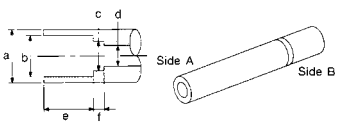 S-NT603	Installing valve oil seal **Use side A.** **a: 20 (0.79) dia.** **d: 8 (0.31) dia.** **b: 13 (0.51) dia.** **e: 10.7 (0.421)** **c: 10.3 (0.406) dia.** **f: 5 (0.20)** Unit: mm (in)

cardiagn.com

Tool number Tool name	Description
EM03470000 Piston ring compressor 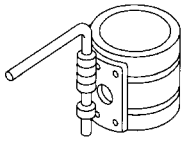 S-NT044	Installing piston assembly into cylinder bore
KV11103000 Pulley puller 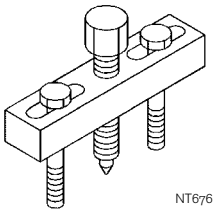 NT676	Removing crankshaft pulley
Quick connector release PBIC0198E	Removing fuel tube quick connectors in engine room (Available in SEC. 164 of PARTS CATALOG: Part No. 16441 6N210)
1. Press stand: ST13030020 2. Center shaft: KV10114120 3. Drift: KV10109730 4. Spring: ST13030030 5. Center cap: KV10110310 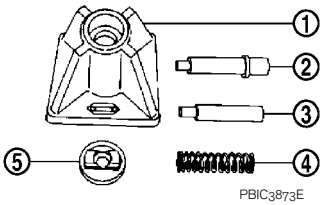 PBIC3873E	Installing and removing piston pin
KV11105210 Stopper plate 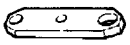 ZZA0009D	Fixing drive plate and flywheel

Commercial Service Tools

INFOID:0000000000893823

cardiagn.com

Tool name	Description
Spark plug wrench 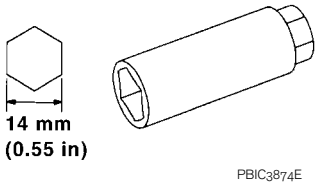	Removing and installing spark plug
Valve seat cutter set 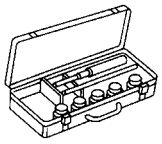	Finishing valve seat dimensions
Piston ring expander 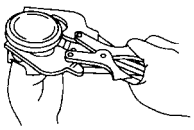	Removing and installing piston ring
Valve guide drift 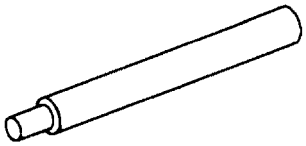	Removing and installing valve guide
Valve guide reamer 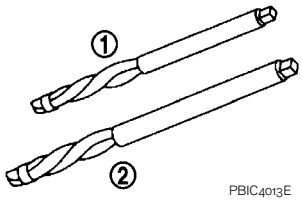	1: Reaming valve guide inner hole 2: Reaming hole for oversize valve guide
Oxygen sensor thread cleaner 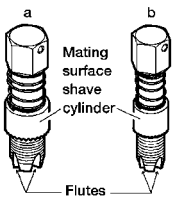	Reconditioning the exhaust system threads before installing a new heated oxygen sensor (Use with anti-seize lubricant shown below.) **a = 18 mm (0.71 in) dia. for zirconia heated oxygen sensor** **b = 12 mm (0.47 in) dia. for titania heated oxygen sensor**
Acoustic tension gauge	Checking drive belt tension

cardiagn.com

Tool name	Description
Anti-seize lubricant (Permatex 133AR or equivalent meeting MIL specification MIL-A-907) AEM489	Lubricating oxygen sensor thread cleaning tool when reconditioning exhaust system threads
Manual lift table caddy 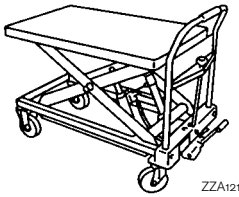 ZZA1210D	Removing and installing engine
Tube presser 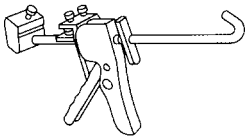 S-NT052	Pressing the tube of liquid gasket

cardiagn.com

ON-VEHICLE MAINTENANCE

DRIVE BELTS

Checking

INFOID:0000000000893827

- Inspection should be done only when engine is cold or over 30 minutes after the engine is stopped.

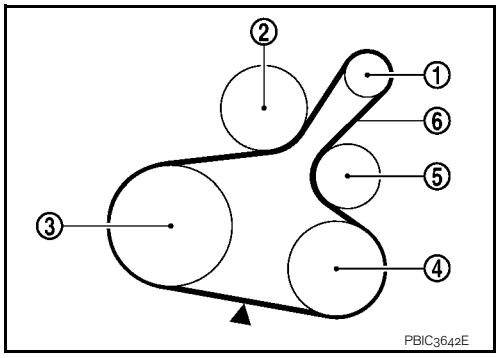

1	: Alternator
2	: Water pump
3	: Crankshaft pulley
4	: A/C compressor (with A/C models) : Idler pulley (without A/C models)
5	: Idler pulley
6	: Drive belt

- Visually check belts for wear, damage, and cracks on inside and edges.
- Turn crankshaft pulley two time clockwise, and make sure tension on all pulleys is equal before doing the test.
- When measuring deflection, apply 98 N (10 kg, 22 lb) at the (▼) marked point.
- Measure the belt tension and frequency with acoustic tension gauge (commercial service tool) at the (▼) marked point.

CAUTION:
- **When the tension and frequency are measured, the acoustic tension gauge should be used.**
- **When checking immediately after installation, first adjust it to the specified value. Then, after turning crankshaft two turns or more, re-adjust to the specified value to avoid variation in deflection between pulleys.**

Belt Deflection / Belt Tension and Frequency:

Refer to EM-115, "Drive Belts".

Tension Adjustment

INFOID:0000000000893828

Location	Location of adjuster and tightening method
Drive belt	Adjusting bolt on idler pulley

CAUTION:
- **When belt is replaced with new one, adjust belt tension to the value for “New belt”, because new belt will not fully seat in the pulley groove.**
- **When tension of the belt being used exceeds “Limit”, adjust it to the value for “After adjusted”.**
- **When installing a belt, make sure it is correctly engaged with the pulley groove.**
- **Never allow oil or engine coolant to get on the belt.**
- **Never twist or bend the belt strongly.**

1. Remove front fender protector (RH). Refer to EXT-21, "Exploded View".
2. Loosen the idler pulley lock nut (A) from the tightening position with the specified torque by 45 degrees.

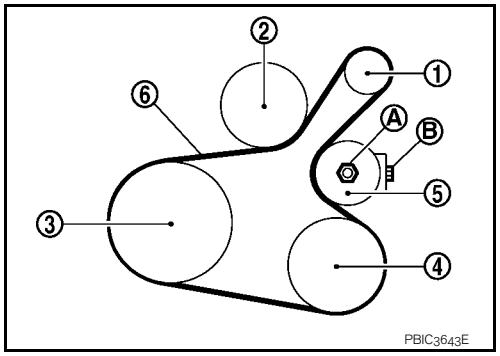

1	: Alternator
2	: Water pump
3	: Crankshaft pulley
4	: A/C compressor (with A/C models) : Idler pulley (without A/C models)
5	: Idler pulley
6	: Drive belt
B	: Adjusting bolt

cardiagn.com

CAUTION:
- **When the lock nut is loosened excessively, the idler pulley tilts and the correct tension adjustment cannot be performed. Never loosen it excessively (more than 45 degrees).**
- **Put a matching mark on the lock nut, and check turning angle with a protractor. Never visually check the tightening angle.**

3. Adjust the belt tension by turning the adjusting bolt.

CAUTION:
- **When checking immediately after installation, first adjust it to the specified value. Then, after turning crankshaft two turns or more, re-adjust to the specified value to avoid variation in deflection between pulleys.**
- **When the tension adjustment is performed, the lock nut should be in the condition at step“2”. If the tension adjustment is performed when the lock nut is loosened more than the standard, the idler pulley tilts and the correct tension adjustment cannot be performed.**

4. Tighten the lock nut.

: 34.8 N·m (3.5 kg-m, 26 ft-lb)

Removal and Installation

INFOID:0000000000894049

REMOVAL

1. Remove front fender protector (RH). Refer to EXT-21, "Exploded View".
2. Loosen the idler pulley lock nut (A), and then adjust the belt tension by turning the adjusting bolt (B).

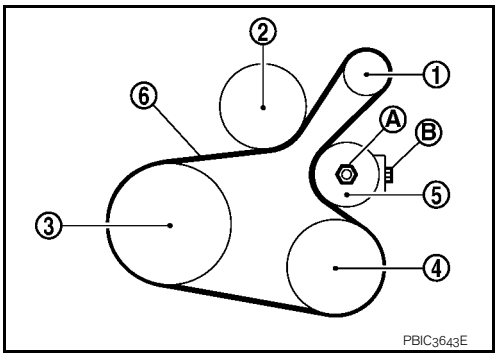

1	: Alternator
2	: Water pump
3	: Crankshaft pulley
4	: A/C compressor (with A/C models) : Idler pulley (without A/C models)
5	: Idler pulley
6	: Drive belt

3. Remove drive belt.

INSTALLATION

1. Pull the idler pulley in the loosening direction, and then temporarily tighten the lock nut (A) to the following torque.

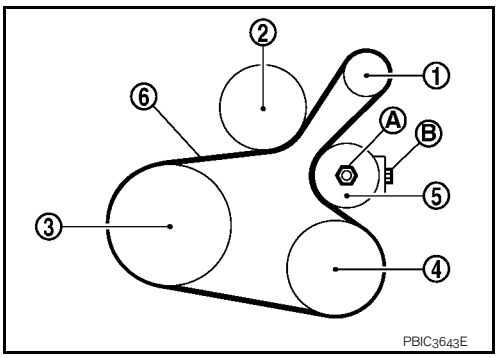

1	: Alternator
2	: Water pump
3	: Crankshaft pulley
4	: A/C compressor (with A/C models) : Idler pulley (without A/C models)
5	: Idler pulley
6	: Drive belt
B	: Adjusting bolt

: 4.4 N·m (0.45 kg-m, 39 in-lb)

NOTE:
Do not move the lock nut from the tightened position. Go to step “2”.

2. Install the drive belt to each pulley.

CAUTION:
- **Make sure that there is no oil, grease, or coolant, etc. in pulley grooves.**
- **Make sure that the belt is securely inside the groove on each pulley.**

3. Adjust drive belt tension by turning the adjusting bolt. Refer to EM-15, "Tension Adjustment".

cardiagn.com

CAUTION:

- **Perform the belt tension adjustment with the lock nut temporarily tightened at the step "1" so as not to tilt the idler pulley.**
- **When checking immediately after installation, first adjust it to the specified value. Then, after turning crankshaft two turns or more, re-adjust to the specified value to avoid variation in deflection between pulleys.**

4. Tighten the lock nut.

   : 34.8 N·m (3.5 kg-m, 26 ft-lb)

5. Make sure that belt tension of each belt within the standard.

cardiagn.com

AIR CLEANER FILTER

Removal and Installation

INFOID:0000000000893830

REMOVAL

1. Unhook clips (A) and remove holder (2) from air cleaner case (1).

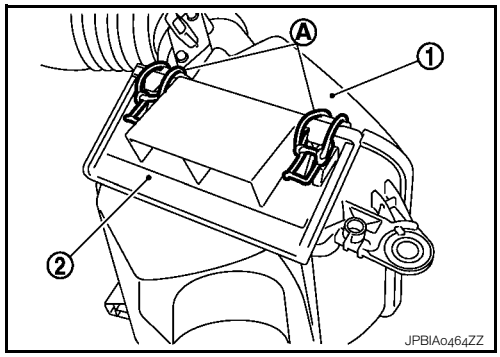

2. Remove air cleaner filter (1) from air cleaner case (2).

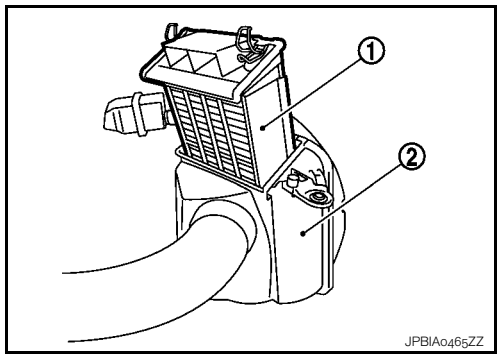

INSTALLATION

Note the following, and install in the reverse order of removal.

- Install the air cleaner filter by aligning the seal with the notch of air cleaner case.

cardiagn.com

SPARK PLUG

Exploded View

INFOID:0000000000893831

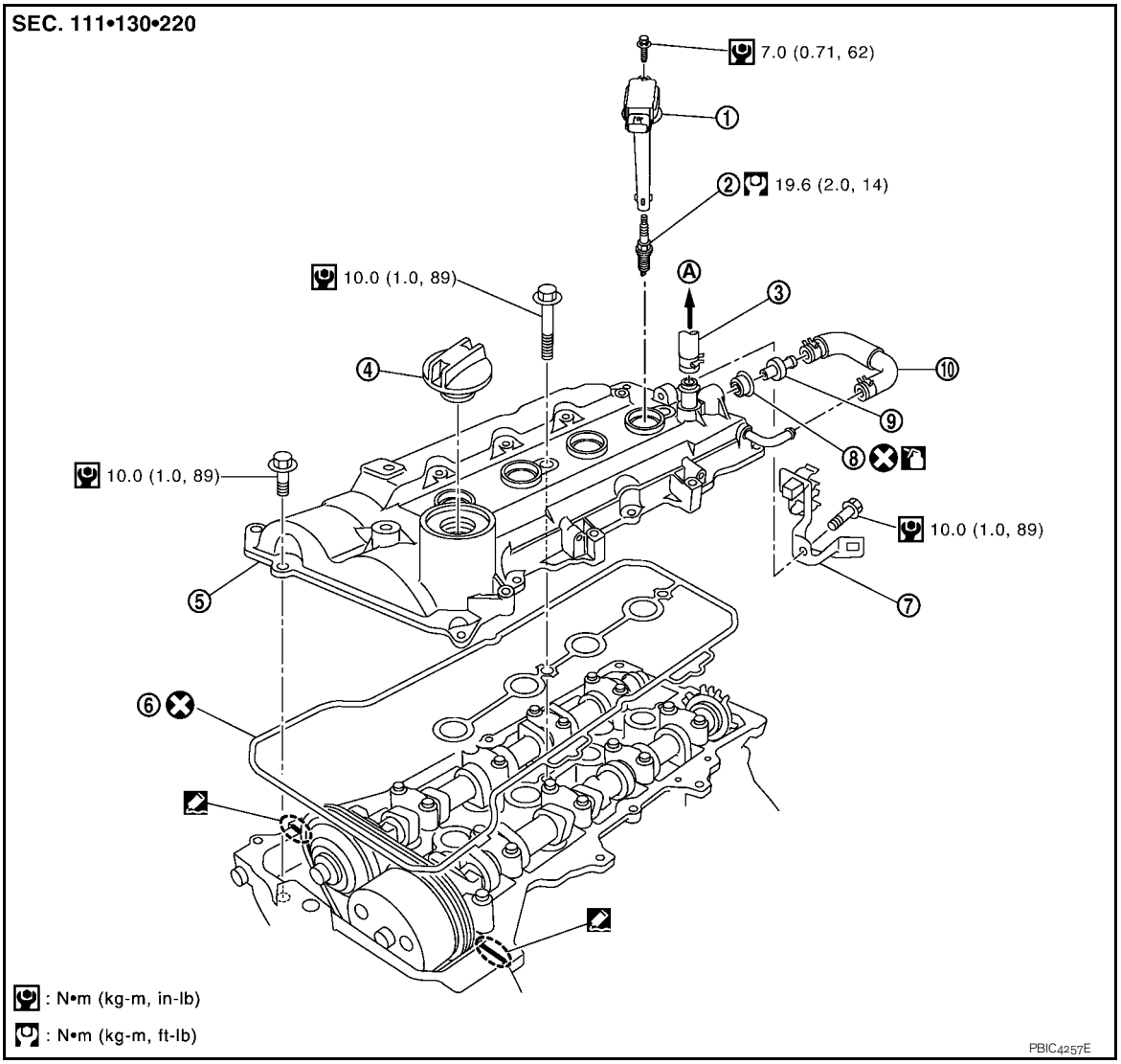

1. Ignition coil
2. Spark plug
3. PCV hose
4. Oil filler cap
5. Rocker cover
6. Gasket
7. Bracket
8. Grommet
9. PCV valve
10. PCV hose

A. To air duct

Refer to GI-4, "Components" for symbols in the figure.

Removal and Installation

INFOID:0000000000893832

REMOVAL

1. Remove intake manifold. Refer to EM-29, "Removal and Installation".
2. Remove ignition coil. Refer to EM-43, "Removal and Installation".

cardiagn.com

3. Remove spark plug with a spark plug wrench (commercial service tool).

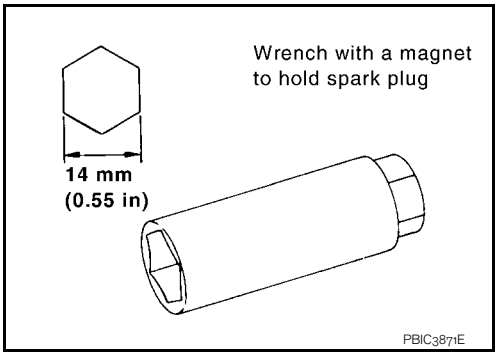

INSTALLATION

Installation is the reverse order of removal.

Inspection

INFOID:0000000000893833

INSPECTION AFTER REMOVAL

Use the standard type spark plug for normal condition.

Spark plug (Standard type): Refer to EM-116, "Spark Plug".

CAUTION:

- **Never drop or shock spark plug.**
- **Never use a wire brush for cleaning.**
- **If plug tip is covered with carbon, spark plug cleaner may be used.**

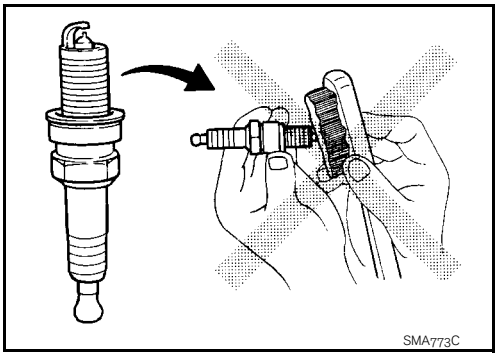

Cleaner air pressure:

Less than 588 kPa (6 kg/cm^2, 85 psi)

Cleaning time:

Less than 20 seconds

- **Checking and adjusting plug gap is not required between change intervals.**

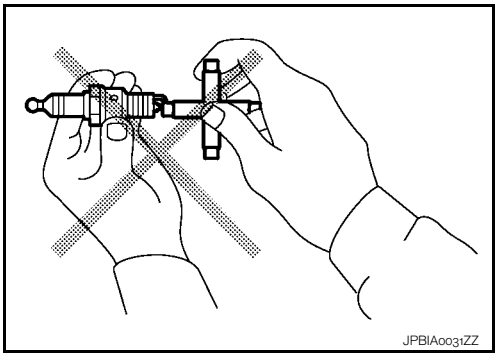

cardiagn.com

CAMSHAFT VALVE CLEARANCE

Inspection and Adjustment

INFOID:0000000000893834

INSPECTION

Perform inspection as follows after removal, installation or replacement of camshaft or valve-related parts, or if there is unusual engine conditions regarding valve clearance.

1. Remove rocker cover. Refer to EM-43, "Exploded View".
2. Measure the valve clearance with the following procedure:

a. Set No. 1 cylinder at TDC of its compression stroke.

- Rotate crankshaft pulley (2) clockwise and align TDC mark (without paint mark) (A) to timing indicator (1) on front cover.

B : White paint mark (Not use for service)

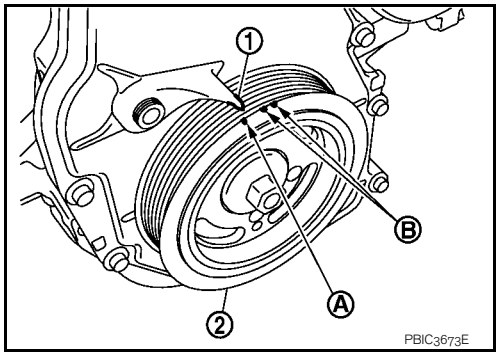

- At the same time, make sure that both intake and exhaust cam noses of No. 1 cylinder face outside as shown in the figure.

1 : Camshaft (INT)
2 : Camshaft (EXH)
⇦ : Engine front

- If they do not face outside, rotate crankshaft pulley once more (360 degrees) and align as shown in the figure.

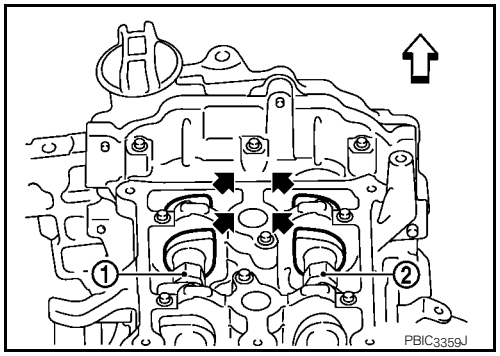

b. Use a feeler gauge, measure the clearance between valve lifter and camshaft.

Valve Clearance: Refer to EM-116, "Camshaft".

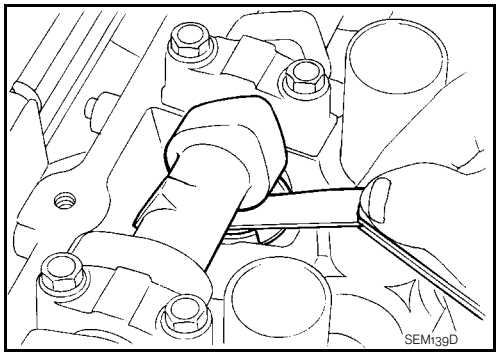

- By referring to the figure, measure the valve clearances at locations marked "×" as shown in the table below [locations indicated with black arrow (⬅) in the figure] with a feeler gauge.

A : No. 1 cylinder compression TDC
⇦ : Engine front

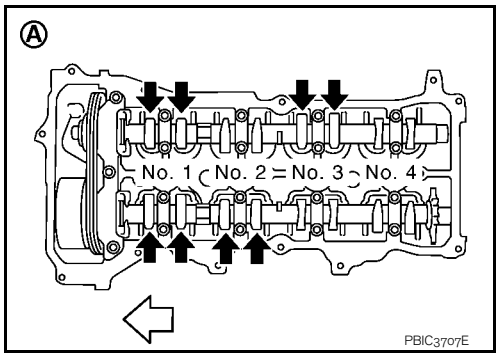

cardiagn.com

Measuring position		No. 1 CYL.	No. 2 CYL.	No. 3 CYL.	No. 4 CYL.
Measurement position	EXH	×		×	
	INT	×	×		

c. Rotate crankshaft pulley (2) one revolution (360 degrees) and align TDC mark (without paint mark) (A) to timing indicator (1) on front cover.

B : White paint mark (Not use for service)

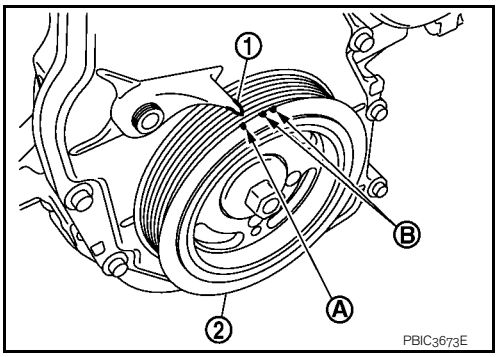

- By referring to the figure, measure the valve clearance at locations marked "×" as shown in the table below [locations indicated with black arrow (⬅) in the figure] with a feeler gauge.

A : No. 4 cylinder compression TDC

⇦ : Engine front

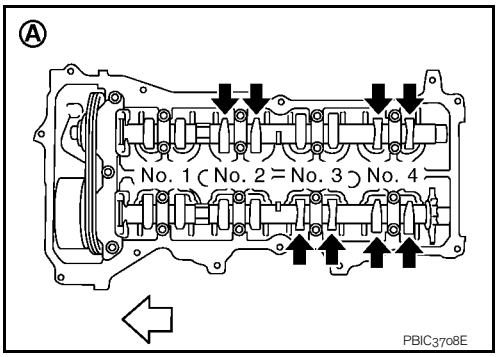

Measuring position		No. 1 CYL.	No. 2 CYL.	No. 3 CYL.	No. 4 CYL.
Measurement point	EXH		×		×
	INT			×	×

3. If out of standard, perform adjustment. Refer to "ADJUSTMENT".

ADJUSTMENT

- Perform adjustment depending on selected head thickness of valve lifter.

1. Remove camshaft. Refer to EM-55, "Exploded View".
2. Remove valve lifters at the locations that are out of the standard.
3. Measure the center thickness of the removed valve lifters with a micrometer (A).

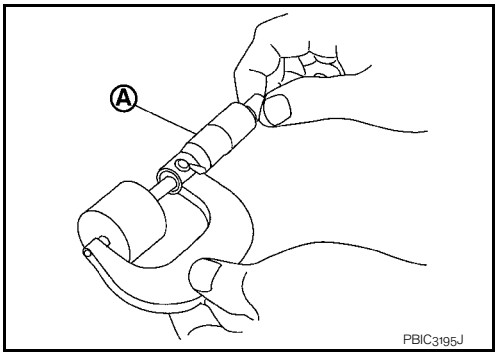

4. Use the equation below to calculate valve lifter thickness for replacement.

Valve lifter thickness calculation: $t = t_1 + (C_1 - C_2)$

t = Valve lifter thickness to be replaced

t_1 = Removed valve lifter thickness

C_1 = Measured valve clearance

C_2 = Standard valve clearance:

Intake : 0.30 mm (0.012 in)

Exhaust : 0.33 mm (0.013 in)

cardiagn.com

- Thickness of new valve lifter (B) can be identified by stamp mark (A) on the reverse side (inside the cylinder).
- Stamp mark “300” indicates 3.00 mm (0.118 in) in thickness.

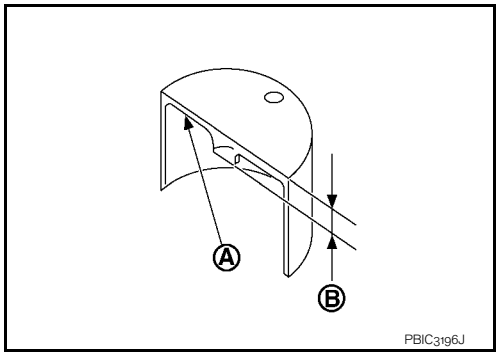

NOTE:
Available thickness of valve lifter: 26 sizes range 3.00 to 3.50 mm (0.1181 to 0.1378 in) in steps of 0.02 mm (0.0008 in) (when manufactured at factory). Refer to EM-116, "Camshaft".

5. Install the selected valve lifter.
6. Install camshaft. Refer to EM-55, "Exploded View".
7. Manually rotate crankshaft pulley a few rotations.
8. Make sure that valve clearances for cold engine are within specifications by referring to the specified values.
9. Install all removed parts in the reverse order of removal.
10. Warm up the engine, and check for unusual noise and vibration.

cardiagn.com

COMPRESSION PRESSURE

Inspection

INFOID:0000000000893835

1. Warm up engine thoroughly. Then, stop it.
2. Release fuel pressure. Refer to EC-357, "Inspection".
3. Remove ignition coil and spark plug from each cylinder. Refer to EM-43, "Exploded View".
4. Connect an engine tachometer (not required in use of CONSULT-III).
5. Install a compression tester (B) with an adapter (commercial service tool) (A) onto spark plug hole.

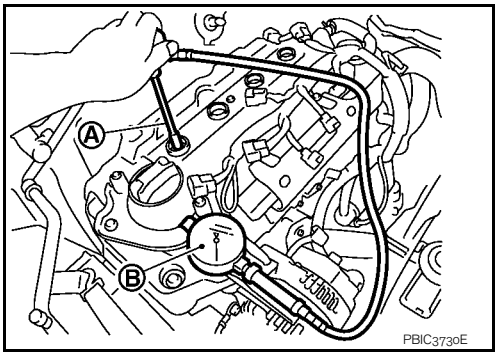

- Use the adapter whose picking up end inserted to spark plug hole is smaller than 20 mm (0.79 in) in diameter. Otherwise, it may be caught by cylinder head during removal.

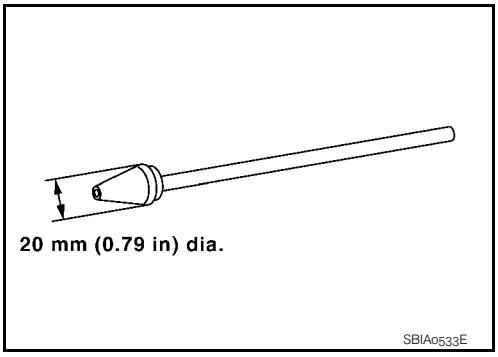

6. With accelerator pedal fully depressed, turn ignition switch to “START” for cranking. When the gauge pointer stabilizes, read the compression pressure and the engine rpm. Perform these steps to check each cylinder.

Compression Pressure: **Refer to EM-115, "General Specification".**

CAUTION:
Always use fully a changed battery to obtain the specified engine speed.
- If the engine speed is out of the specified range, check battery liquid for proper gravity. Check engine speed again with normal battery gravity.
- If compression pressure is below minimum value, check valve clearances and parts associated with combustion chamber (Valve, valve seat, piston, piston ring, cylinder bore, cylinder head, cylinder head gasket). After the checking, measure the compression pressure again.
- If some cylinder has low compression pressure, pour small amount of engine oil into the spark plug hole of the cylinder to re-check it for compression.
  - If the added engine oil improves the compression, piston rings may be worn out or damaged. Check piston rings and replace if necessary.
  - If the compression pressure remains at low level despite the addition of engine oil, valves may be malfunctioning. Check valves for damage. Replace valve or valve seat accordingly.
- If two adjacent cylinders have respectively low compression pressure and their compression remains low even after the addition of engine oil, cylinder head gasket is leaking. In such a case, replace cylinder head gasket.

7. After inspection is completed, install removed parts.
8. Start the engine, and confirm that the engine runs smoothly.
9. Perform trouble diagnosis. If DTC appears, erase it. Refer to EC-109, "Description".

cardiagn.com

ON-VEHICLE REPAIR

DRIVE BELT IDLER PULLEY

Exploded View

INFOID:0000000001093109

1 : Alternator bracket
2 : Center shaft
3 : Spacer
4 : Adjusting bolt
5 : Washer
6 : Idler pulley
7 : Plate

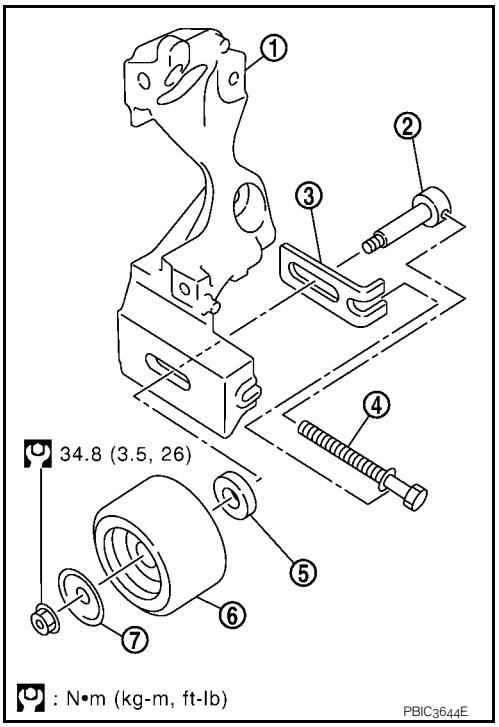

Removal and Installation

INFOID:0000000001093106

REMOVAL

1. Remove drive belt. Refer to EM-16, "Removal and Installation".
2. Remove the lock nut, and then remove the plate, idler pulley, and washer.
3. Remove the center shaft together with the spacer with inserting the adjusting bolt.

INSTALLATION

cardiagn.com

1. Insert the center shaft (1) into the slide groove of the spacer (2). Fully screw in the adjusting bolt (3) in the belt loosening direction (⇦).
   - At that time, place the flange (a) of the adjusting bolt and the seat (b) of the center shaft on the spacer.
2. Place each surface (c, d) of the spacer on the alternator bracket. Install the washer, idler pulley, and plate, and then temporarily tighten the lock nut.

   : 3.9 N·m (0.40 kg-m, 35 in-lb)

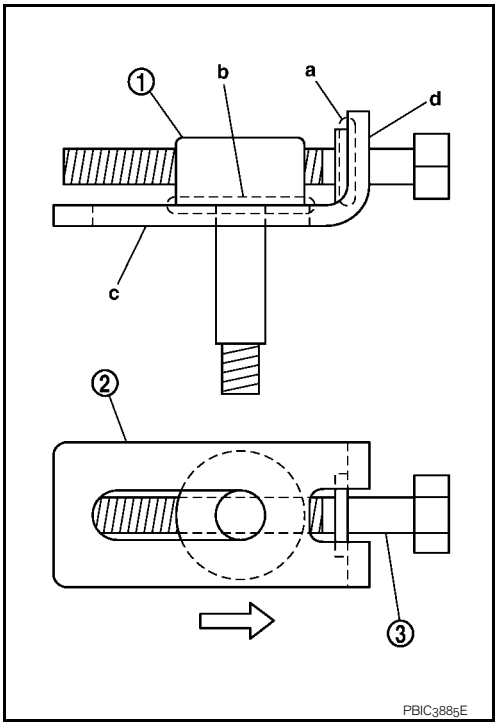

3. Install removed parts in the reverse order of removal.

cardiagn.com

AIR CLEANER AND AIR DUCT

Exploded View

INFOID:0000000000893838

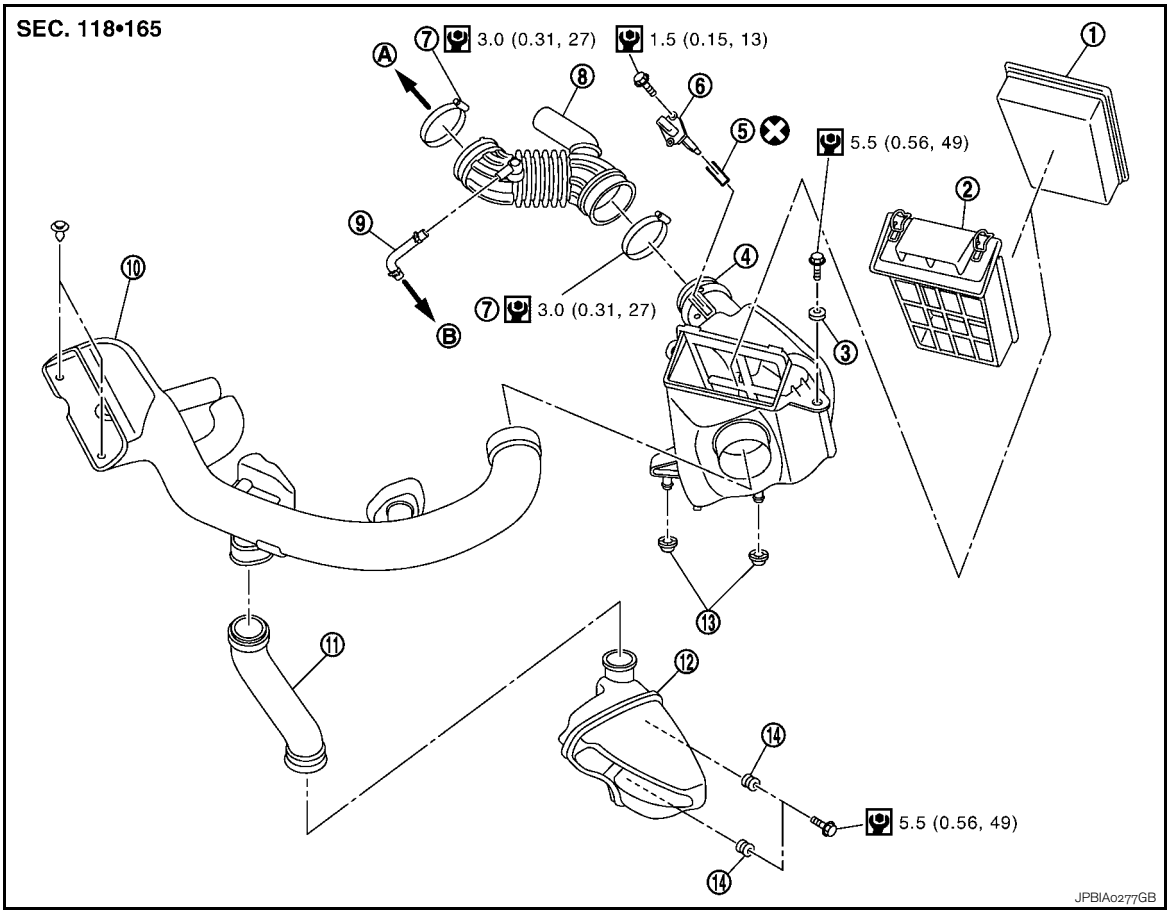

1. Air cleaner filter	2. Holder	3. Grommet
4. Air cleaner case	5. O-ring	6. Mass air flow sensor
7. Clamp	8. Air duct and resonator assembly	9. PCV hose
10. Air duct (inlet)	11. Air duct	12. Resonator
13. Grommet	14. Grommet	
A. To electric throttle control actuator	B. To rocker cover	

Refer to GI-4, "Components" for symbols in the figure.

Removal and Installation

INFOID:0000000000894018

REMOVAL

1. Remove the air duct (inlet).
2. Disconnect mass air flow sensor harness connector.
3. Remove the PCV hose.
4. Remove air cleaner case/mass air flow sensor assembly and air duct and resonator assembly disconnecting their joints.
   - Add marks as necessary for easier installation.
5. Remove air cleaner case.
6. Remove the mass air flow sensor from the air cleaner case, if necessary.
   CAUTION:
   - **Handle mass air flow sensor carefully and avoid impacts.**
   - **Never touch sensor part.**

cardiagn.com

INSTALLATION

Note the following, and install in the reverse order of removal.

- Align marks. Attach each joint. Screw clamps firmly.

Inspection

INFOID:0000000000893840

INSPECTION AFTER REMOVAL

Inspect air duct and resonator assembly for crack or tear.

- If anything found, replace air duct and resonator assembly.

cardiagn.com

INTAKE MANIFOLD

Exploded View

INFOID:0000000000893844

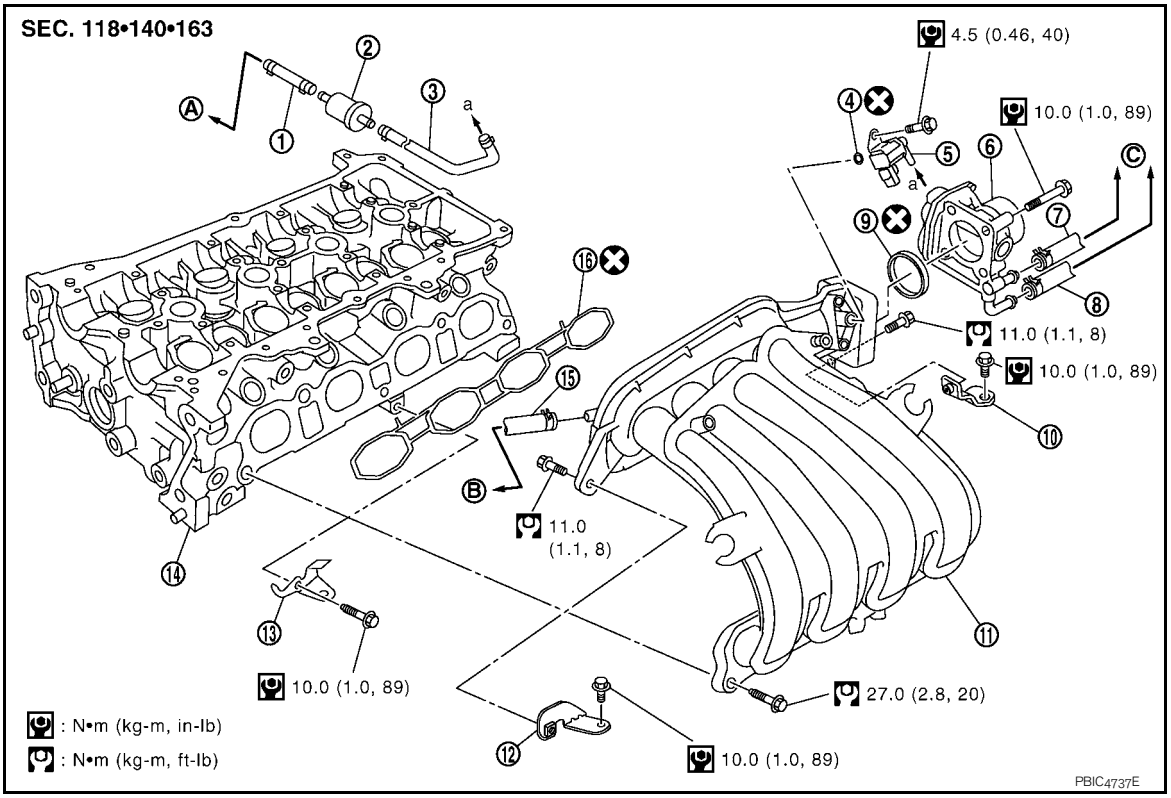

1.	EVAP hose	2.	Vacuum tank	3.	EVAP hose
4.	O-ring	5.	EVAP canister purge volume control solenoid valve	6.	Electric throttle control actuator
7.	Water hose (Northern Europe models)	8.	Water hose (Northern Europe models)	9.	Gasket
10.	Intake manifold support (rear)	11.	Intake manifold	12.	Intake manifold support (front)
13.	Intake manifold support (center)	14.	Cylinder head	15.	Vacuum hose
16.	Gasket				
A.	To centralized under-floor piping	B.	To brake booster	C.	To water outlet

Refer to GI-4, "Components" for symbols in the figure.

Removal and Installation

INFOID:0000000000894020

REMOVAL

1. Remove the air duct (inlet) and the air duct and resonator assembly. Refer to EM-27, "Exploded View".
2. Disconnect water hoses from electric throttle control actuator, attach blind plug to prevent engine coolant leakage. (Northern Europe models)
   CAUTION:
   - **Perform this step when the engine is cold.**
   - **Never spill engine coolant on drive belts.**
3. Pull out oil level gauge.
   CAUTION:
   Cover the oil level gauge guide openings to avoid entry of foreign materials.
4. Remove electric throttle control actuator.
   CAUTION:
   - **Handle electric throttle control actuator carefully and avoid impacts.**
   - **Never disassemble or adjust electric throttle control actuator.**

cardiagn.com

5. Disconnect the harness connector and EVAP hose from the EVAP canister purge volume control solenoid valve.
6. Disconnect vacuum hose for brake booster from intake manifold.
7. Remove intake manifold support front (1) and rear (2).

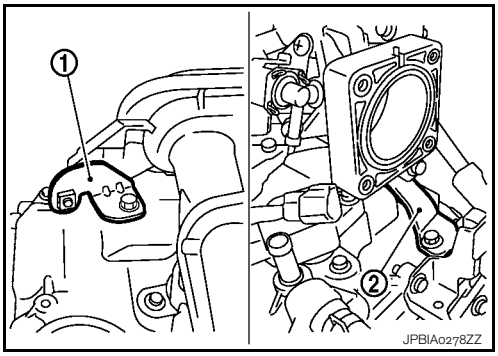

8. Remove intake manifold.
   - Loosen bolts in the reverse of the order shown in the figure.

   ⇦ : Engine front

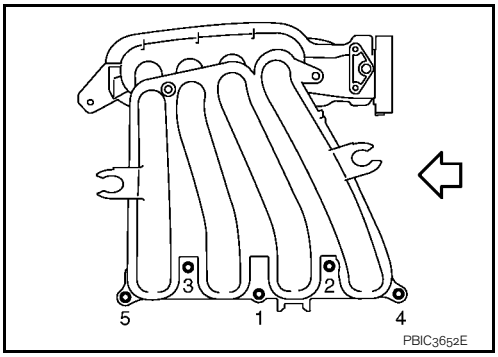

9. Remove EVAP canister purge volume control solenoid valve from intake manifold, if necessary.
   CAUTION:
   Handle EVAP canister purge volume control solenoid valve carefully and avoid impacts.
10. Remove intake manifold support (center) from cylinder head, if necessary.
   NOTE:
   The intake manifold support (center) functions as the guide when the intake manifold is installed.

INSTALLATION

Note the following, and install in the reverse order of removal.

Intake Manifold

1. Install the gasket to the intake manifold.
   - Align the protrusion (A) of gasket to the groove of intake manifold.

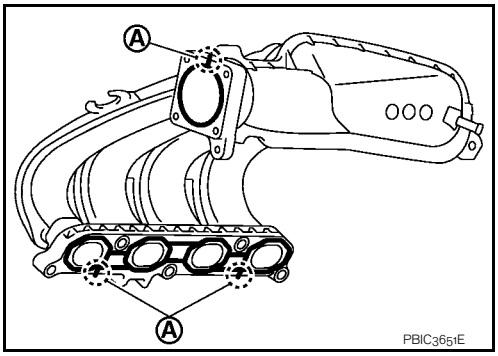

2. Place the intake manifold into the installation position.
   CAUTION:
   Make sure that the oil level gauge guide is not disconnected from the fixing clip of water inlet due to interference with intake manifold.

cardiagn.com

3. Tighten bolts in the numerical order shown in the figure.

⇦ : Engine front

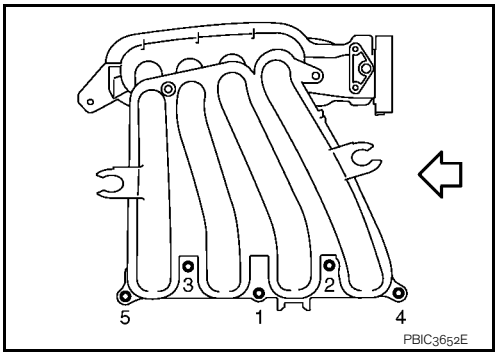

4. Install intake manifold support (front and rear).

Electric Throttle Control Actuator

- Tighten bolts of electric throttle control actuator equally and diagonally in several steps.
- Perform “Throttle Valve Closed Position Learning” after repair when removing harness connector of the electric throttle control actuator. Refer to EC-31, "THROTTLE VALVE CLOSED POSITION LEARNING : Description".
- Perform “Throttle Valve Closed Position Learning” and “Idle Air Volume Learning” after repair when replacing electric throttle control actuator. Refer to EC-31, "IDLE AIR VOLUME LEARNING : Description".

cardiagn.com

EXHAUST MANIFOLD

Exploded View

INFOID:0000000000893847

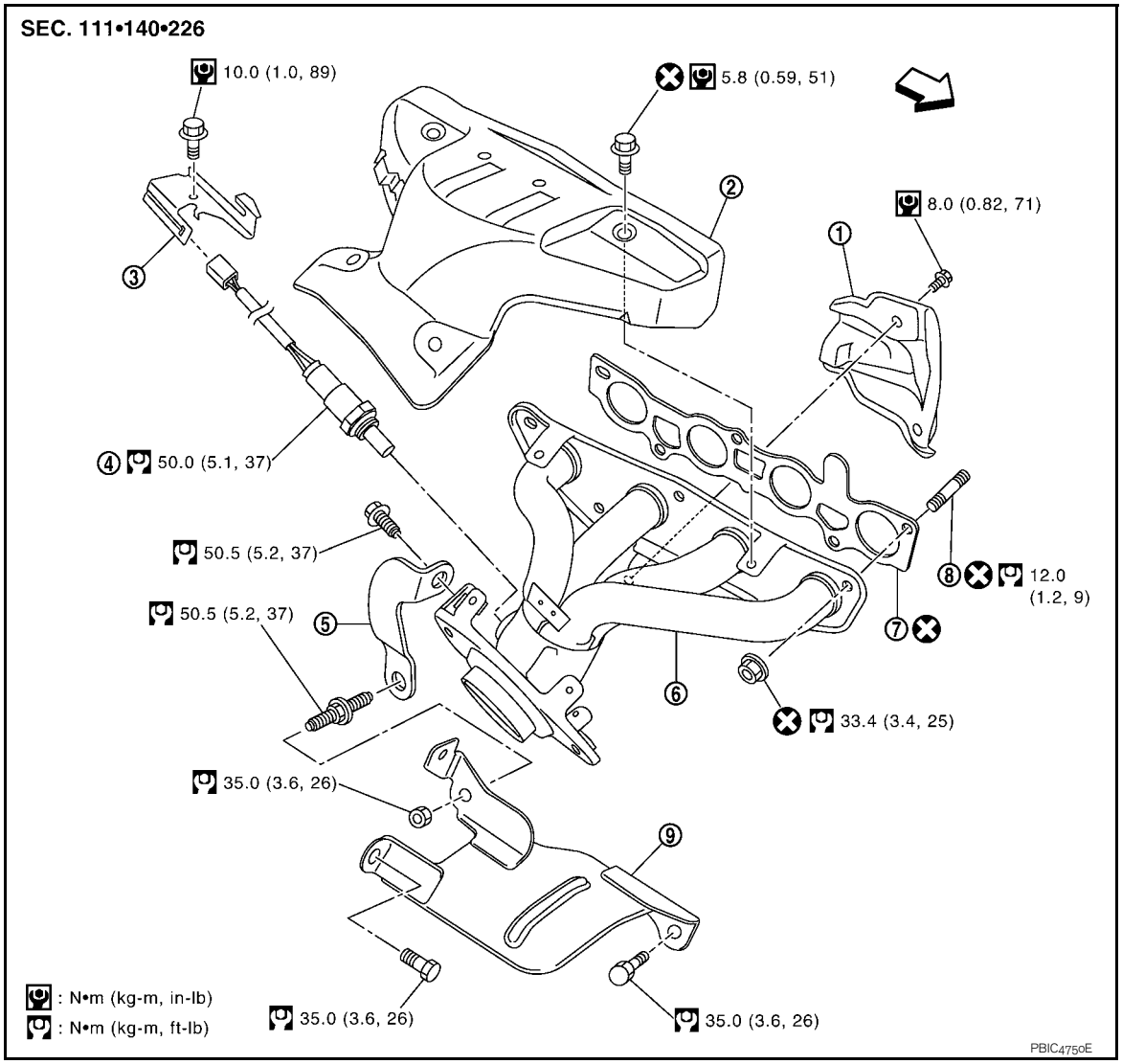

1.	Exhaust manifold cover	2.	Exhaust manifold cover	3.	Harness bracket
4.	Heated oxygen sensor 1	5.	Exhaust manifold stay	6.	Exhaust manifold
7.	Gasket	8.	Stud bolt	9.	Heat insulator

⇦ : Engine front

Refer to GI-4, "Components" for symbols in the figure.

Removal and Installation

INFOID:0000000000894021

REMOVAL

1. Remove exhaust front tube. Refer to EX-5, "Exploded View".
2. Remove the harness bracket of heated oxygen sensor 1 from the cylinder head.
3. Remove exhaust manifold cover.
4. Remove the heated oxygen sensor 1.

cardiagn.com

- Using heated oxygen sensor wrench [SST: KV10117100] (A), remove heated oxygen sensor 1.

CAUTION:
Handle heated oxygen sensor 1 carefully and avoid impacts.
NOTE:
The exhaust manifold can be removed and installed without removing the heated oxygen sensor 1 (Disassembly of harness connector is necessary).

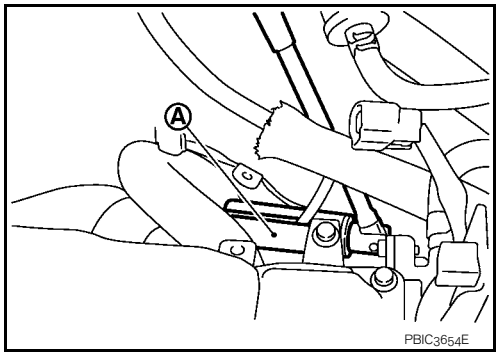

5. Remove exhaust manifold side mounting bolt of exhaust manifold stay.
6. Remove exhaust manifold.
   - Loosen nuts in the reverse of the order shown in the figure.

⇦ : Engine front

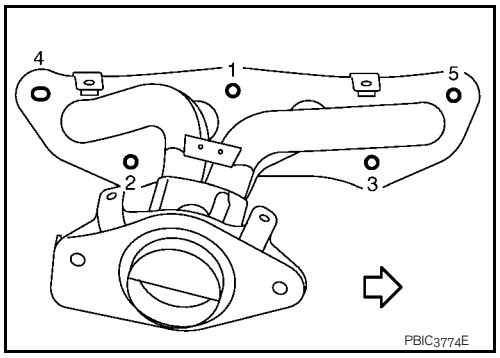

7. Remove gasket.
   CAUTION:
   Cover engine openings to avoid entry of foreign materials.
8. Remove exhaust manifold cover from back of exhaust manifold.

INSTALLATION

Note the following, and install in the reverse order of removal.

Exhaust Manifold

1. Tighten nuts in numerical order shown in the figure.

⇦ : Engine front

2. Tighten to the specified torque again.

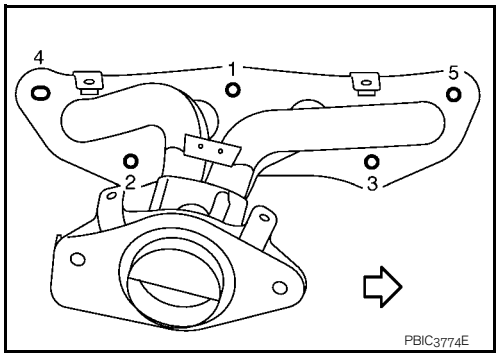

Inspection

INFOID:0000000000893849

INSPECTION AFTER REMOVAL

Mounting Surface Distortion

cardiagn.com

- Using a straightedge (B) and feeler gauge (A), check distortion of exhaust manifold mounting surface.

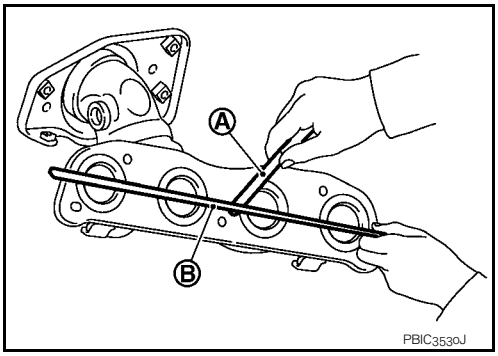

Limit: **Refer to EM-116, "Exhaust Manifold".**

- Replace exhaust manifold if outside the limit.

cardiagn.com

FUEL INJECTOR AND FUEL TUBE

Exploded View

INFOID:0000000000893850

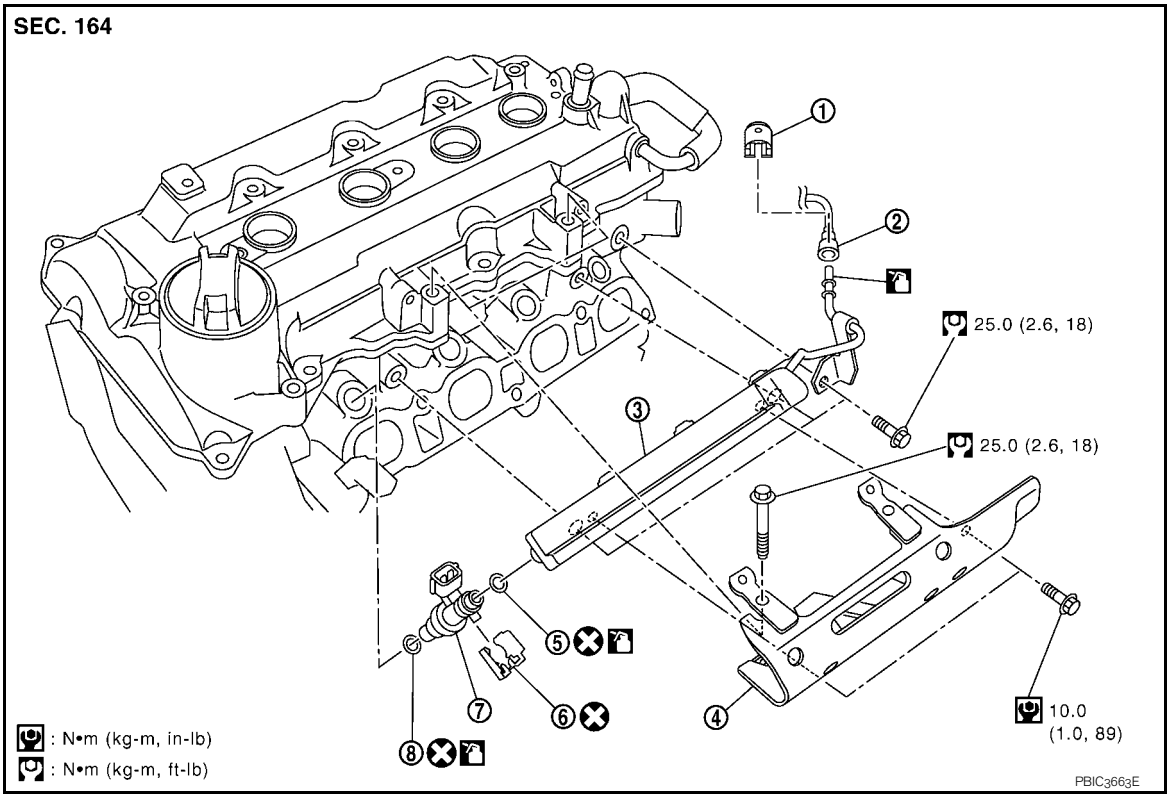

1.	Quick connector cap	2.	Fuel feed hose	3.	Fuel tube
4.	Fuel tube protector	5.	O-ring (black)	6.	Clip
7.	Fuel injector	8.	O-ring (green)		

Refer to GI-4, "Components" for symbols in the figure.

CAUTION:
Never remove or disassemble parts unless instructed as shown in the figure.

Removal and Installation

INFOID:0000000000894022

WARNING:
- **Put a “CAUTION: FLAMMABLE” sign in the workshop.**
- **Be sure to work in a well ventilated area and furnish workshop with a CO_2 fire extinguisher.**
- **Never smoke while servicing fuel system. Keep open flames and sparks away from the work area.**

REMOVAL

1. Release the fuel pressure. Refer to EC-357, "Inspection".
2. Remove intake manifold. Refer to EM-29, "Exploded View".

cardiagn.com

3. Disconnect quick connector with the following procedure. Disconnect fuel feed hose from fuel tube.

   1 : Quick connector cap

   NOTE:
   There is no fuel return path.

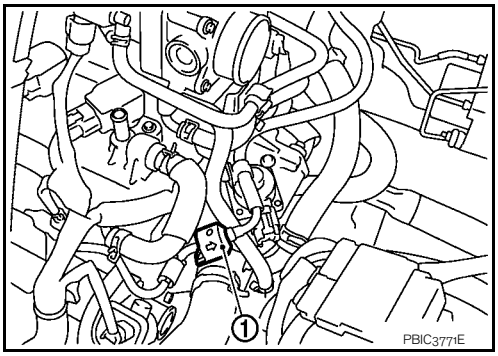

a. Remove quick connector cap (1) from quick connector connection.
b. Disconnect fuel feed hose from hose clamp.

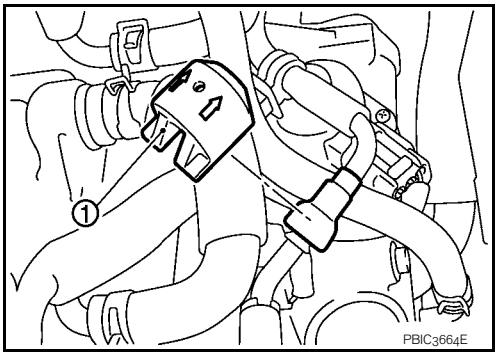

c. With the sleeve side of quick connector release (SST) facing quick connector, install quick connector release onto fuel tube.
d. Insert quick connector release into quick connector until sleeve contacts and goes no further. Hold quick connector release on that position.
   CAUTION:
   Inserting quick connector release hard will not disconnect quick connector. Hold quick connector release where it contacts and goes no further.
e. Draw and pull out quick connector straight from fuel tube.
   CAUTION:
   - **Pull quick connector holding "A" position in the figure.**
   - **Never pull with lateral force applied. O-ring inside quick connector may be damaged.**
   - **Prepare container and cloth beforehand as fuel will leak out.**
   - **Avoid fire and sparks.**
   - **Keep parts away from heat source. Especially, be careful when welding is performed around them.**
   - **Never expose parts to battery electrolyte or other acids.**
   - **Never bend or twist connection between quick connector and fuel feed hose during installation/removal.**
   - **To keep clean the connecting portion and to avoid damage and foreign materials, cover them completely with plastic bags or something similar.**

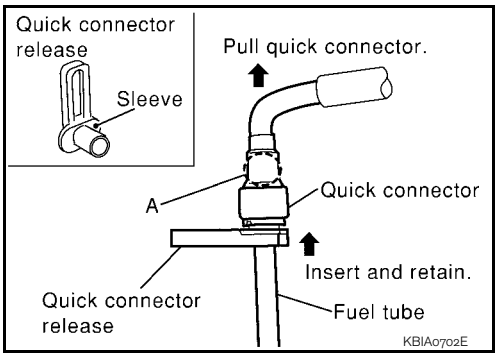

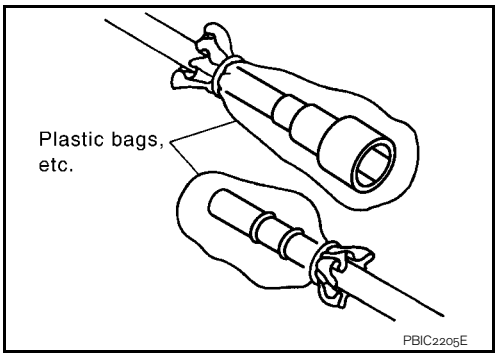

4. Disconnect harness connector from fuel injector.

cardiagn.com

5. Remove fuel tube protector.
   - Loosen bolts in the reverse of the order shown in the figure.

   ⇦ : Engine front

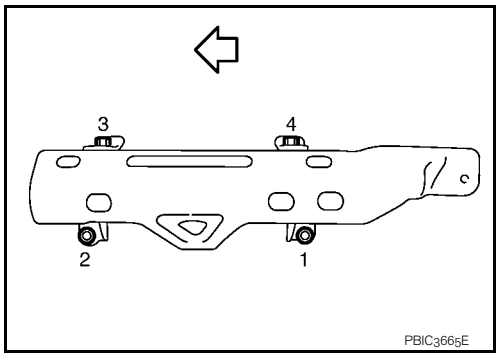

6. Remove the fuel injector and fuel tube assembly.
   - Loosen bolts in the reverse of the order shown in the figure.

   ⇦ : Engine front

   CAUTION:
   - **When removing, be careful to avoid any interference with fuel injector.**
   - **Use a shop cloth to absorb any fuel leaks from fuel tube.**

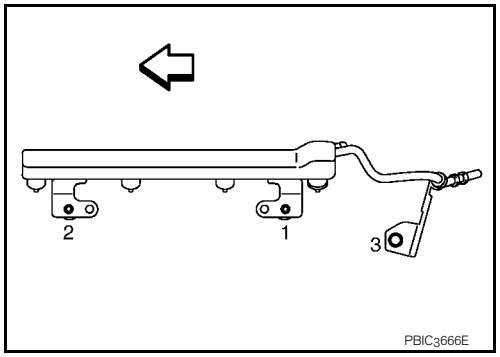

7. Remove the fuel injector (3) from the fuel tube (1) with the following procedure.

a. Open and remove the clip (2).

b. Remove fuel injector from the fuel tube by pulling straight.
   CAUTION:
   - **Be careful about fuel leakage remaining in fuel tube.**
   - **Be careful not to damage the nozzle of fuel injector.**
   - **Never subject fuel injector to impact by dropping or hitting.**
   - **Never disassemble.**

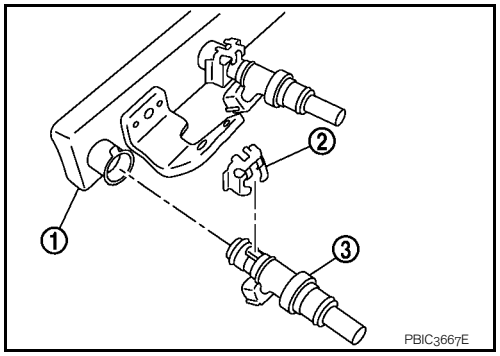

INSTALLATION

1. Install new the O-ring to the fuel injector, paying attention to the following.
   CAUTION:
   - **The upper and lower O-rings are different. Be careful not to confuse them.**

Fuel tube side	**: Black**
Nozzle side	**: Green**

   - **Handle O-ring with bare hands. (Never wear gloves.)**
   - **Lubricate O-ring with engine oil.**
   - **Never clean O-ring with solvent.**
   - **Make sure that the O-ring and its mating part are free of foreign material.**
   - **Be careful not to scratch O-ring with tool or fingernails when installing it. Also be careful not to twist or stretch O-ring. If O-ring is stretched while installing, never insert it into fuel tube immediately.**
   - **Insert O-ring straight into fuel tube. Never decenter or twist it.**

cardiagn.com

2. Install the fuel injector (4) onto the fuel tube (1) with the following procedure:

   3 : O-ring (Black)
   5 : O-ring (Green)

a. Insert the clips (2) into the clip mounting grooves on the fuel injector.
   - Insert clip cut-out (D) into fuel injector protrusion (F).

   CAUTION:
   - **Always replace clip with new one.**
   - **Make sure that the clip does not interfere with the O-ring. If interference occurs, replace the O-ring.**

b. Insert the fuel injector into the fuel tube with clip attached.
   - Make sure that the axis is lined up when inserting.
   - Insert clip cut-out (C) into fuel tube protrusion (B).
   - Make sure that the flange (A) on the fuel tube fits securely in the clip flange fixing groove (E).

c. Make sure that installation is complete by checking that fuel injector does not rotate or come off.

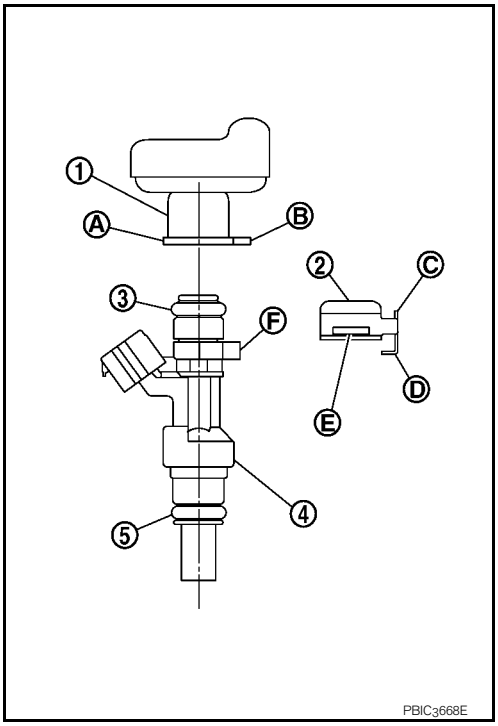

3. Install fuel tube and injector assembly onto cylinder head.
   - Tighten bolts in the numerical order shown in the figure.

   ⇦ : Engine front

   CAUTION:
   Be careful not to let tip of injector nozzle interfere with other parts.

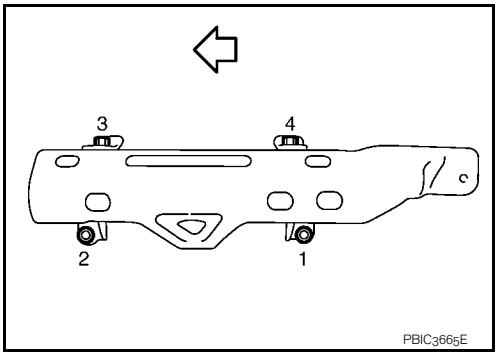

4. Install fuel tube protector.
   - Tighten bolts in the numerical order shown in the figure.

   ⇦ : Engine front

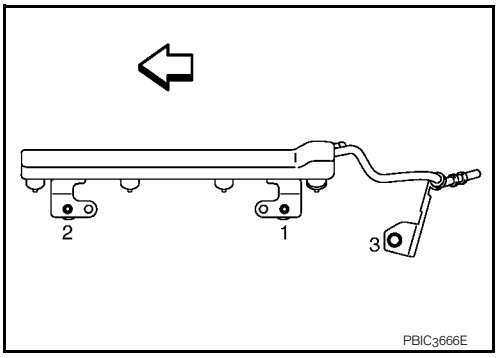

5. Connect harness connector to fuel injector.
6. Connect fuel feed hose with the following procedure.

a. Check for damage or foreign material on the fuel tube and quick connector.
b. Apply new engine oil lightly to area around the top of fuel tube.

cardiagn.com

c. Align center to insert quick connector straightly into fuel tube.
   - Insert quick connector to fuel tube until the top spool on fuel tube is inserted completely and the 2nd level spool is positioned slightly below quick connector bottom end.

     CAUTION:
     - **Hold "A" position in the figure when inserting fuel tube into quick connector.**
     - **Carefully align center to avoid inclined insertion to prevent damage to O-ring inside quick connector.**
     - **Insert until you hear a "click" sound and actually feel the engagement.**
     - **To avoid misidentification of engagement with a similar sound, be sure to perform the next step.**

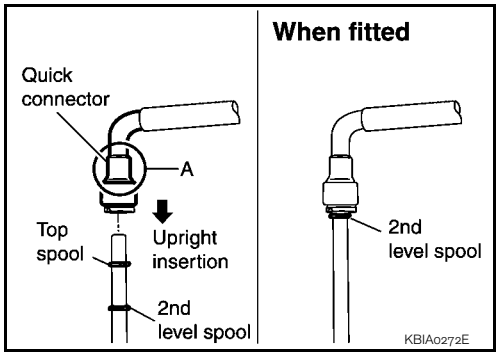

d. Before clamping fuel feed hose with hose clamp, pull quick connector hard by hand holding "A" position. Make sure it is completely engaged (connected) so that it does not come out from fuel tube.

e. Install quick connector cap (1) to quick connector connection.
   - Install quick connector cap with the side arrow facing quick connector side (fuel feed hose side).

     CAUTION:
     - **Make sure that the quick connector and fuel tube are securely engaged with the quick connector cap mounting groove.**
     - **Quick connector may not be connected correctly if quick connector cap cannot be installed easily. Remove the quick connector cap, and then check the connection of quick connector again.**

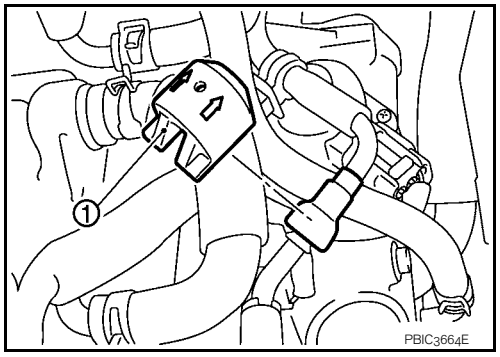

f. Install fuel feed hose to hose clamp.

7. Install in the reverse order of removal, for the rest of parts.

Inspection

INFOID:0000000000893852

INSPECTION AFTER INSTALLATION

Check on Fuel Leakage

1. Turn ignition switch "ON" (with the engine stopped). With fuel pressure applied to fuel piping, make sure there are no fuel leaks at connection points.

   NOTE:
   Use mirrors for checking at points out of clear sight.

2. Start the engine. With engine speed increased, make sure again that there are no fuel leaks at connection points.

   CAUTION:
   Never touch the engine immediately after stopped, as the engine becomes extremely hot.

cardiagn.com

OIL PAN (LOWER)

Exploded View

INFOID:0000000000894120

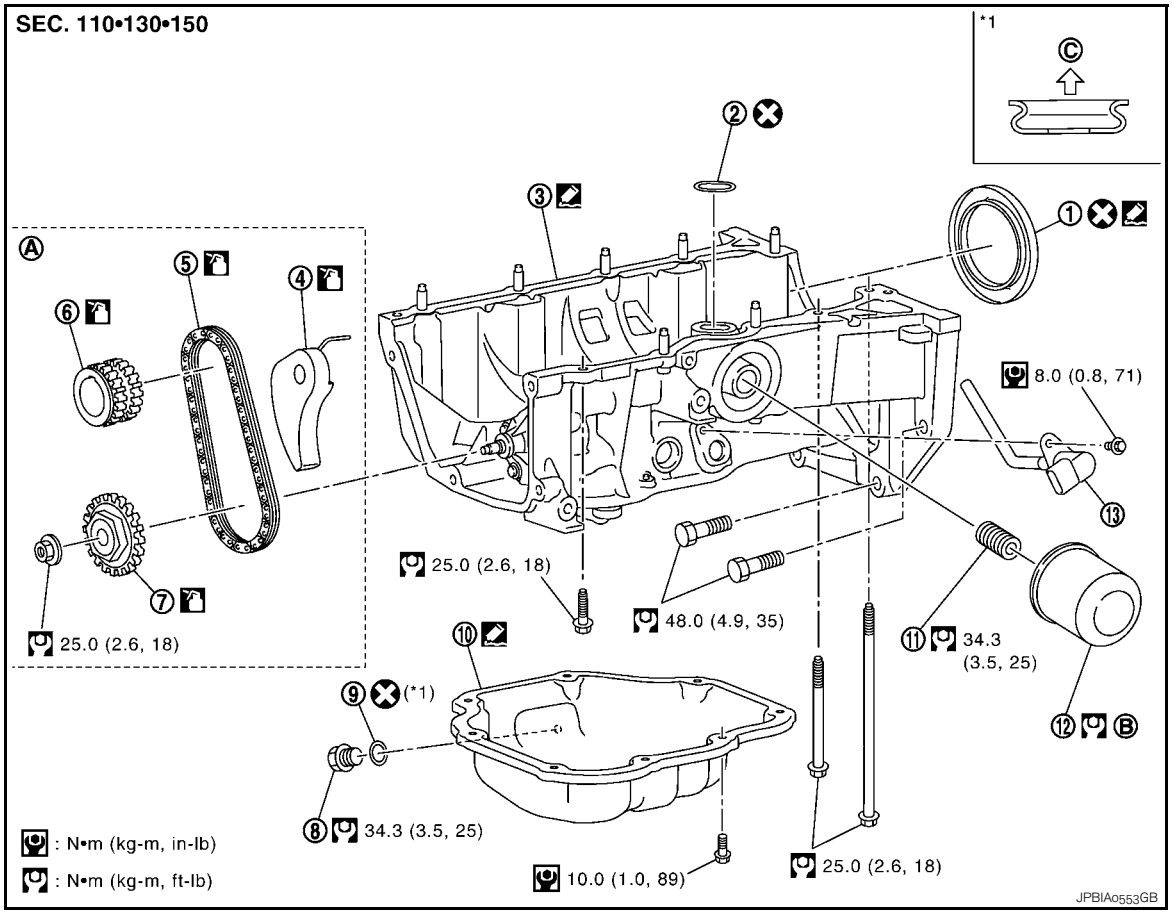

1.	Rear oil seal	2.	O-ring	3.	Oil pan (upper)
4.	Chain tensioner	5.	Oil pump drive chain	6.	Crankshaft sprocket
7.	Oil pump sprocket	8.	Oil pan drain plug	9.	Washer
10.	Oil pan (lower)	11.	Oil filter stud bolt	12.	Oil filter
13.	Oil level sensor				
A.	Refer to EM-46	B.	Refer to LU-9	C.	Oil pan side

Refer to GI-4, "Components" for symbols in the figure.

Removal and Installation

INFOID:0000000000894123

REMOVAL

1. Drain engine oil. Refer to LU-7, "Draining".
2. Remove the oil pan (lower) with the following procedure.

cardiagn.com

a. Loosen bolts in the reverse of the order shown in the figure.

⇦ : Engine front

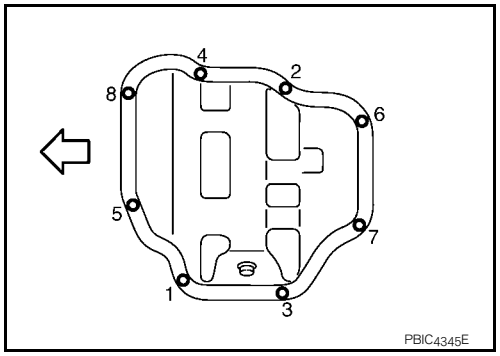

b. Insert the seal cutter [SST: KV10111100] between oil pan (upper) and oil pan (lower).
CAUTION:
- **Be careful not to damage the mating surface.**
- **A more adhesive liquid gasket is applied compared to previous types when shipped, so it should not be forced off using a flat- bladed screwdriver, etc.**

INSTALLATION

1. Install oil pan (lower) with the following procedure.

a. Use scraper to remove old liquid gasket from mating surfaces.
- Also remove the old liquid gasket from mating surface of oil pan (upper).
- Remove old liquid gasket from the bolt holes and threads.

CAUTION:
Never scratch or damage the mating surfaces when cleaning off old liquid gasket.

b. Apply a continuous bead of liquid gasket (A) with the tube presser (commercial service tool) to areas shown in the figure.

⬅ : Engine out side

Use Genuine Liquid Gasket or equivalent.
CAUTION:
Attaching should be done within 5 minutes after coating.

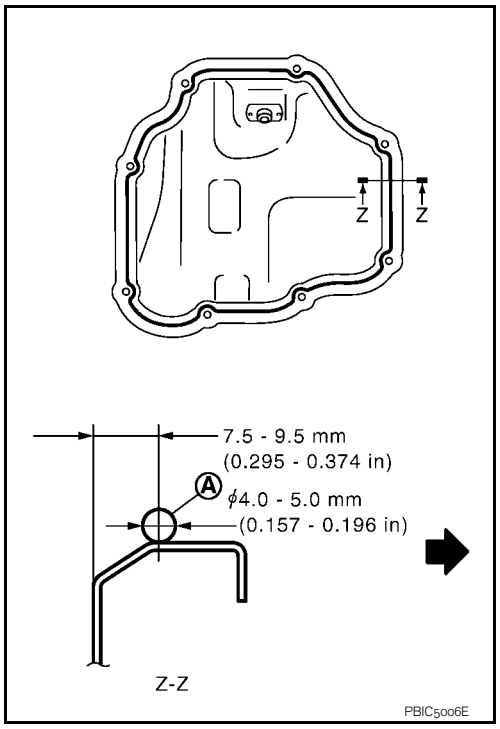

c. Tighten bolts in the numerical order shown in the figure.

⇦ : Engine front

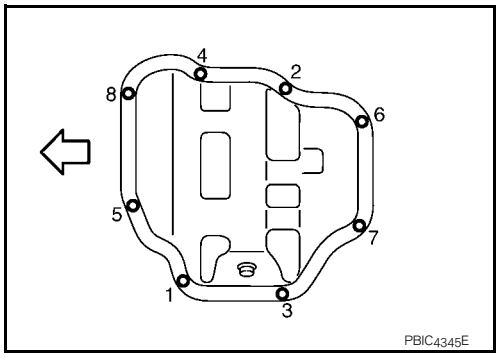

2. Install oil pan drain plug.
- For installation direction of washer. Refer to EM-40, "Exploded View".

3. Install in the reverse order of removal, for the rest of parts.
CAUTION:

cardiagn.com

Pour engine oil at least 30 minutes after oil pan is installed.

Inspection

INFOID:0000000000893856

INSPECTION AFTER INSTALLATION

1. Check the engine oil level and adjust engine oil. Refer to LU-6, "Inspection".
2. Start engine, and check there is no leak of engine oil.
3. Stop engine and wait for 10 minutes.
4. Check the engine oil level again. Refer to LU-6, "Inspection".

cardiagn.com

IGNITION COIL, SPARK PLUG AND ROCKER COVER

Exploded View

INFOID:0000000000893857

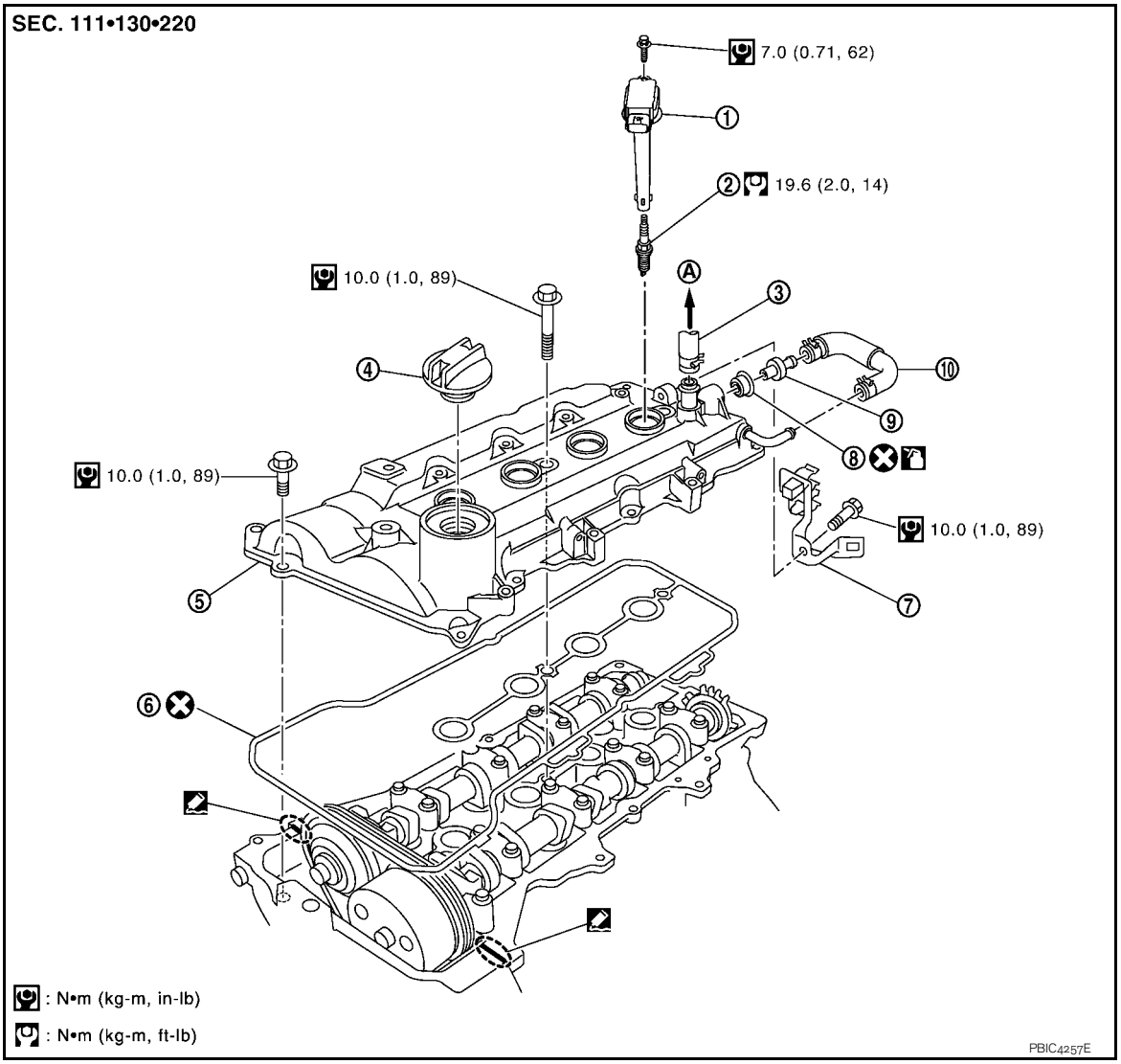

1.	Ignition coil	2.	Spark plug	3.	PCV hose
4.	Oil filler cap	5.	Rocker cover	6.	Gasket
7.	Bracket	8.	Grommet	9.	PCV valve
10.	PCV hose				
A.	To air duct				

Refer to GI-4, "Components" for symbols in the figure.

Removal and Installation

INFOID:0000000000893858

REMOVAL

1. Remove intake manifold. Refer to EM-29, "Exploded View".
2. Remove ignition coil.
   CAUTION:
   - **Handle ignition coil carefully and avoid impacts.**
   - **Never disassemble.**
3. Remove grand cable (RH).

cardiagn.com

4. Support the bottom surface of engine using a transmission jack, and then remove the engine mounting bracket and insulator (RH). Refer to EM-83, "Exploded View".
5. Remove fuel tube protector.
6. Remove oil filler cap.
7. Remove rocker cover.
   - Loosen bolts in reverse order shown in the figure.

   ⇦ : Engine front

   NOTE:
   13 and 14 shown in the figure are used to tighten the fuel tube protector.

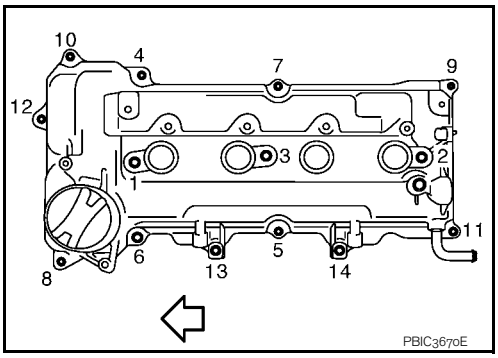

8. Remove rocker cover gasket from rocker cover.
9. Use scraper to remove all traces of liquid gasket from cylinder head and front cover.
   CAUTION:
   Never scratch or damage the mating surface when cleaning off old liquid gasket.

INSTALLATION

1. Install the rocker cover with the following procedure.

a. Install the gasket to the rocker cover.
   - Check for damage or foreign material.
   - Make sure that it is securely inserted in the mounting groove of rocker cover.
   - For the 2 bolt holes shown in the figure, push the gasket into the boss for the rocker cover bolt hole to prevent it from falling.

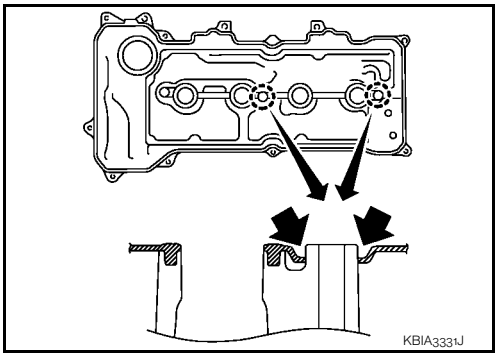

b. Apply liquid gasket to the position shown in the figure.

   1 : Cylinder head
   2 : Front cover

   Use Genuine Liquid Gasket or equivalent.

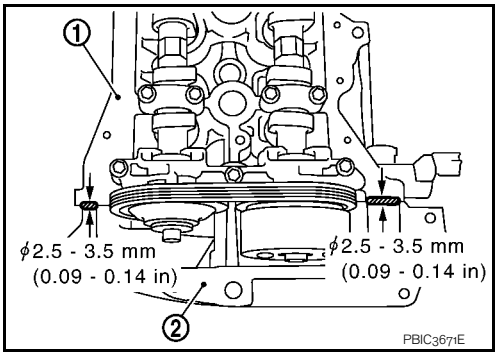

2. Install rocker cover to the cylinder head.
   CAUTION:
   Make sure the gasket is not dropped.
3. Install rocker cover.

cardiagn.com

- Tighten bolts in two steps separately in numerical order as shown in the figure.

⇦ : Engine front

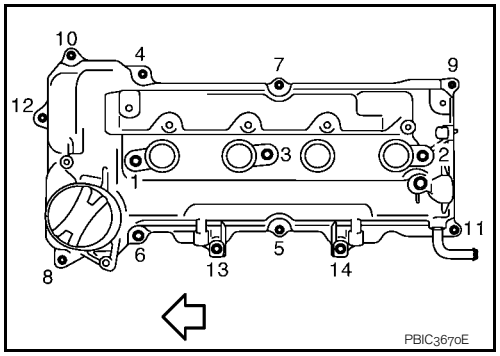

4. Install in the reverse order of removal, for the rest of parts.

cardiagn.com

TIMING CHAIN

Exploded View

INFOID:0000000000893859

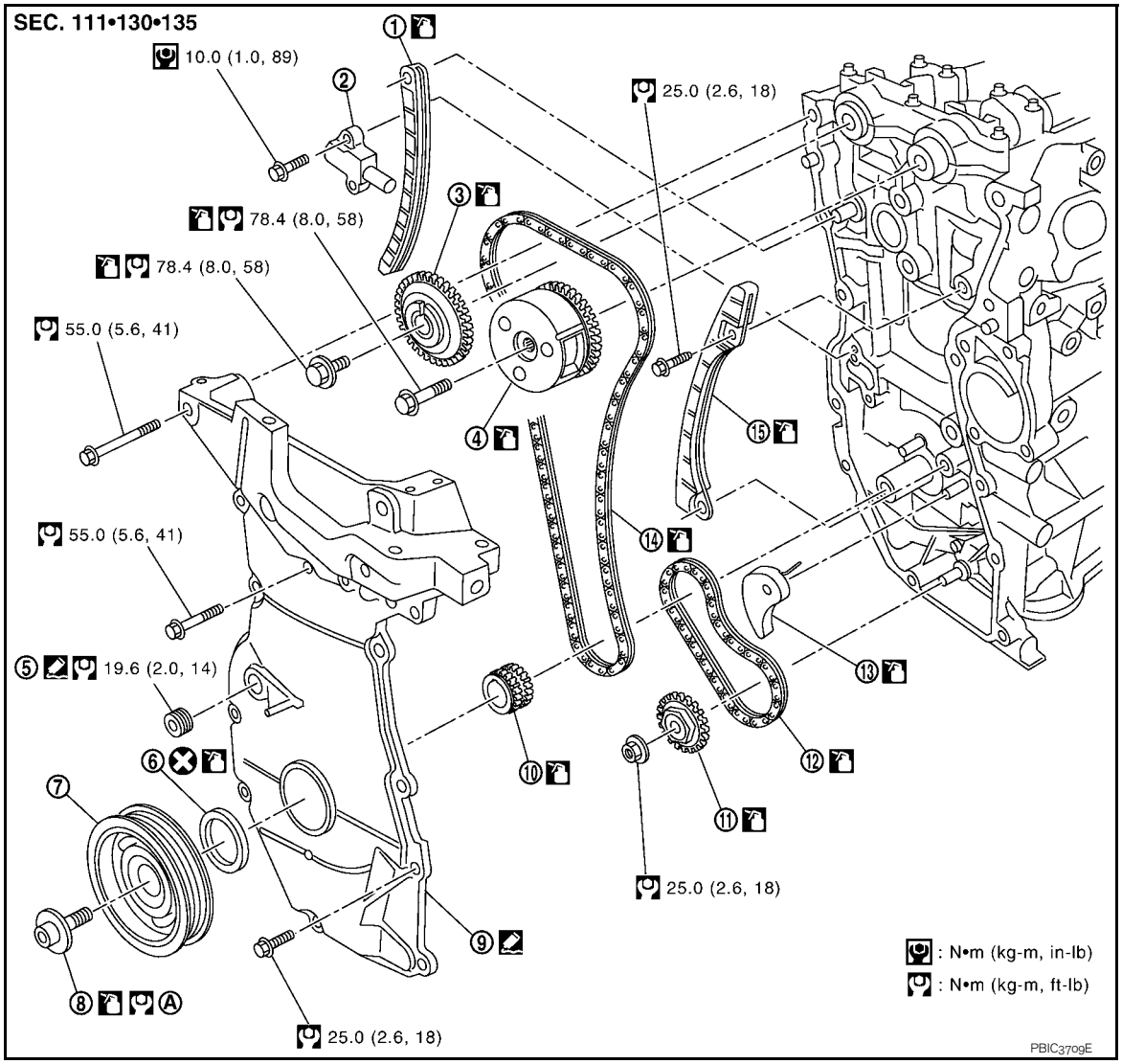

1. Timing chain slack guide	2. Chain tensioner (for timing chain)	3. Camshaft sprocket (EXH)
4. Camshaft sprocket (INT)	5. Plug	6. Front oil seal
7. Crankshaft pulley	8. Crankshaft pulley bolt	9. Front cover
10. Crankshaft sprocket	11. Oil pump sprocket	12. Oil pump drive chain
13. Chain tensioner (for oil pump drive chain)	14. Timing chain	15. Timing chain tension guide

A. Refer to EM-46

Refer to GI-4, "Components" for symbols in the figure.

Removal and Installation

INFOID:0000000000894024

CAUTION:
The rotation direction indicated in the text indicates all directions seen from the engine front direction.

REMOVAL

1. Remove front wheel (RH). Refer to WT-4, "Road Wheel".
2. Remove front fender protector (RH). Refer to EXT-21, "Exploded View".
3. Drain engine oil. Refer to LU-7, "Draining".
   CAUTION:

cardiagn.com

Be sure to perform this step when engine is cold.

4. Remove the following parts.
   - Intake manifold: Refer to EM-29, "Exploded View".
   - Drive belt: Refer to EM-16, "Removal and Installation".
   - Water pump pulley: Refer to CO-17, "Exploded View".
   - Ground cable (RH)
5. Support the bottom surface of engine using a transmission jack, and then remove the engine mounting bracket and insulator (RH). Refer to EM-83, "Exploded View".
6. Remove rocker cover. Refer to EM-43, "Exploded View".
7. Set No. 1 cylinder at TDC of its compression stroke with the following procedure:

a. Rotate crankshaft pulley (2) clockwise and align TDC mark (without paint mark) (A) to timing indicator (1) on front cover.

B : White paint mark (Not use for service)

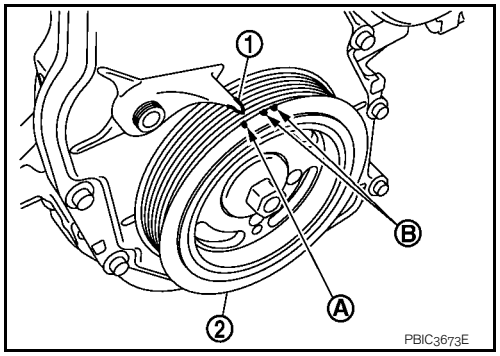

b. Make sure the matching marks on each camshaft sprocket are positioned as shown in the figure.

1 : Camshaft sprocket (EXH)
2 : Camshaft sprocket (INT)
A : Matching mark (stamp)
B : Matching mark (peripheral stamp line)

- If not, rotate crankshaft pulley one more turn to align matching marks to the positions in the figure.

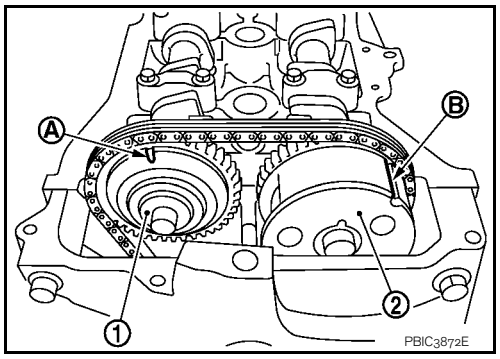

8. Remove crankshaft pulley with the following procedure:

a. Secure crankshaft pulley (1) using a pulley holder (commercial service tool) (A).

b. Loosen and pull out crankshaft pulley bolts.
CAUTION:
Never remove the mounting bolts as they are used as a supporting point for the pulley puller.

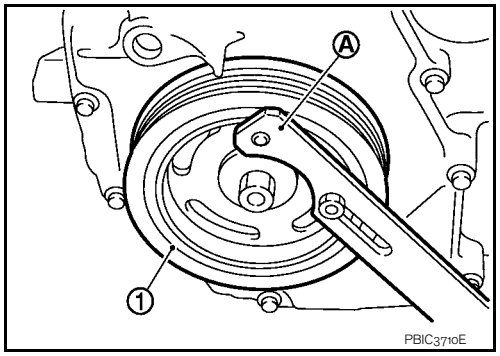

c. Attach a pulley puller [SST: KV11103000] (A) in the M 6 thread hole on crankshaft pulley, and remove crankshaft pulley.

B : M6 bolt

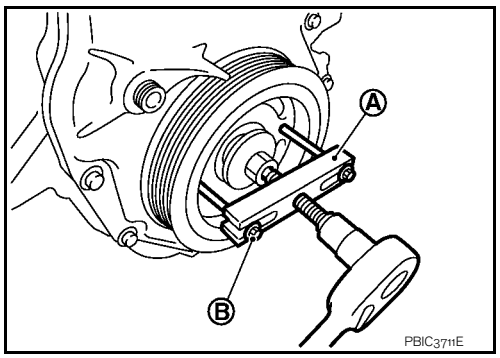

cardiagn.com

9. Remove front cover with the following procedure:

a. Loosen bolts in the reverse of the order shown in the figure.

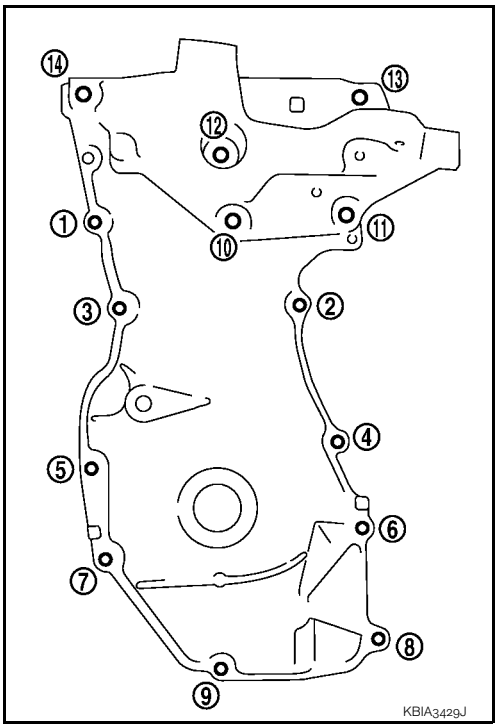

b. Cut liquid gasket by prying the position (⬅) shown in the figure, and then remove the front cover.

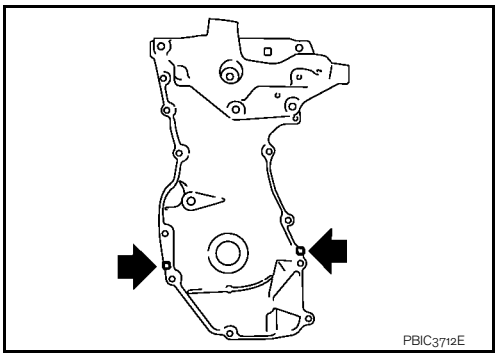

10. Remove front oil seal from front cover.
    - Remove by lifting it up using a suitable tool.

    CAUTION:
    Be careful not to damage the front cover.

11. Remove chain tensioner (1) with the following procedure.

a. Fully push down the chain tensioner lever (A), and then push the plunger (C) into the inside of tensioner.
    - The tab (B) is released by fully pushing the lever down. As a result, the plunger can be moved.

b. Pull up the lever to align its hole position with the body hole position.
    - When the lever hole is aligned with the body hole position, the plunger is fixed.
    - When the protrusion parts of the plunger ratchet and the tab face each other, both hole positions are not aligned. At that time, correctly engage them and align these hole positions by slightly moving the plunger.

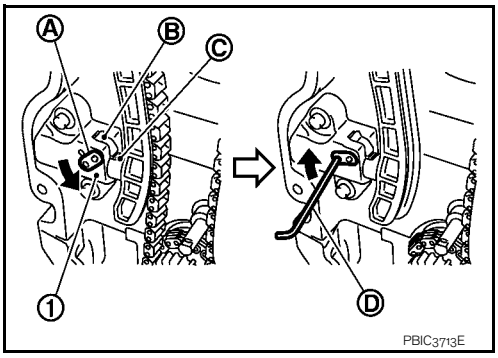

c. Insert the stopper pin (D) into the body hole through the lever hole, and then fix the lever at the upper position.
    - Figure shows the example that a hexagonal wrench for 2.5 mm (0.098 in) is used.

d. Remove chain tensioner.

cardiagn.com

12. Remove the timing chain tension guide (2) and the timing chain slack guide (1).

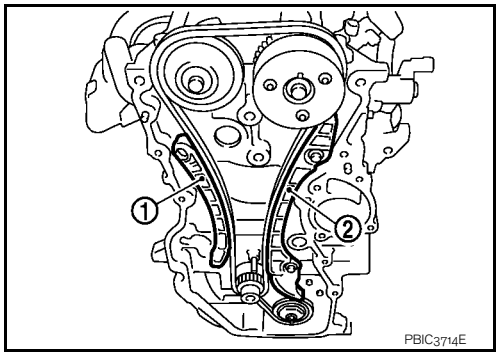

13. Remove the timing chain (2).
    - Pull the looseness of timing chain toward the camshaft sprocket (EXH) (1), and then remove the timing chain and start the removal from camshaft sprocket (EXH) side.

    CAUTION:
    Never rotate crankshaft or camshaft while timing chain is removed. It causes interference between valve and piston.

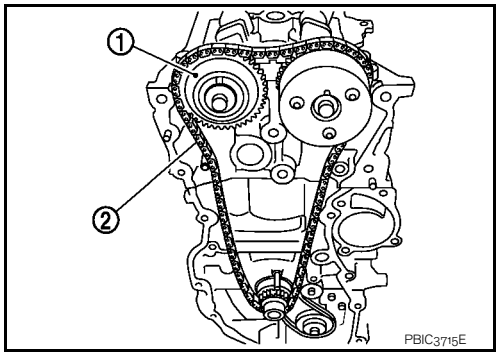

14. Remove the crankshaft sprocket and the oil pump drive related parts with the following procedure.

a. Remove chain tensioner (1).
    - Pull out from the shaft (B) and spring fixing holes (A).

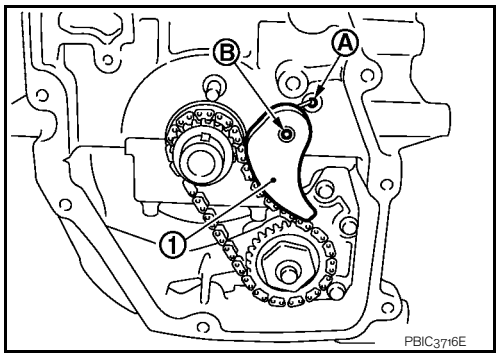

b. Hold the top of the oil pump shaft using the TORX socket (size: E8), and then loosen the oil pump sprocket nuts and remove them.

c. Remove the crankshaft sprocket (1), the oil pump drive chain (2), and the oil pump sprocket (3) at the same time.

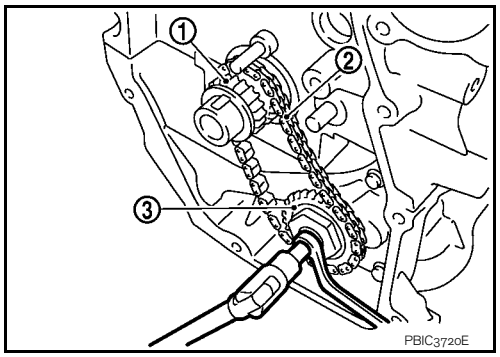

INSTALLATION

NOTE:

cardiagn.com

The figure shows the relationship between the matching mark on each timing chain and that on the corresponding sprocket, with the components installed.

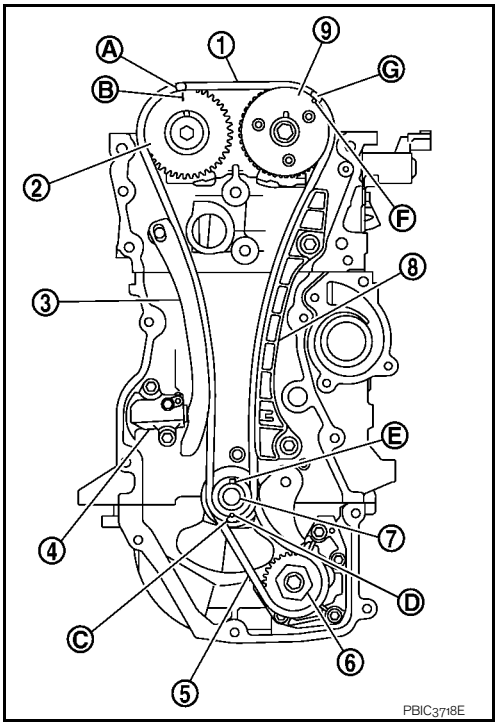

1 : Timing chain
2 : Camshaft sprocket (EXH)
3 : Timing chain slack guide
4 : Chain tensioner
5 : Oil pump drive chain
6 : Oil pump sprocket
7 : Crankshaft sprocket
8 : Timing chain tension guide
9 : Camshaft sprocket (INT)
A : Dark blue link
B : Matching mark (stamp)
C : Orange link
D : Matching mark (stamp)
E : Crankshaft key (point straight up)
F : Matching mark (peripheral stamp line)
G : Dark blue link

1. Install the crankshaft sprocket and the oil pump drive related parts with the following procedure:

a. Install the crankshaft sprocket (1), the oil pump drive chain (2), and the oil pump sprocket (3) at the same time.

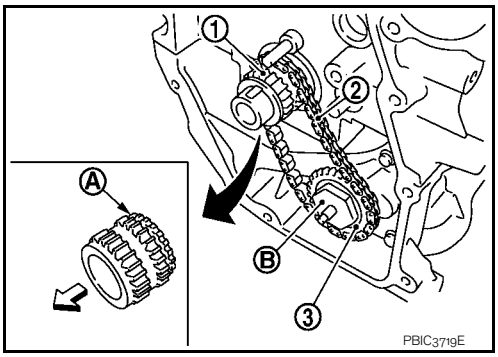

⇦ : Engine front

- Install the crankshaft sprocket so that its invalid gear area (A) is towards the back of the engine.
- Install the oil pump sprocket so that its hexagonal surface faces (B) the front of engine.

NOTE:
There is no matching mark in the oil pump drive related parts.

b. Hold the top of the oil pump shaft using the TORX socket (size: E8), and then tighten the oil pump sprocket nuts.

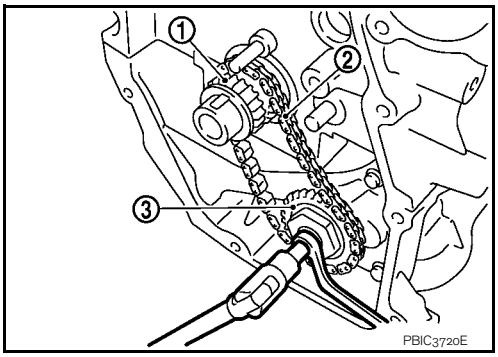

1 : Crankshaft sprocket
2 : Oil pump drive chain
3 : Oil pump sprocket

cardiagn.com

c. Install chain tensioner (1).
- Insert the body into the shaft (B) while inserting the spring into the fixing hole (A) of cylinder block front surface.
- Make sure that the tension is applied to the oil pump drive chain after installing.

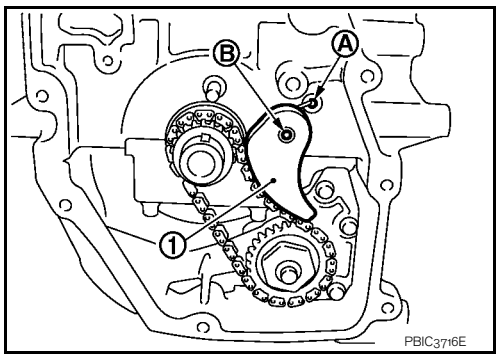

2. Install timing chain with the following procedure.

A	: Dark blue link
B	: Matching mark (stamp)
C	: Orange link
D	: Matching mark (stamp)
E	: Crankshaft key (point straight up)
F	: Matching mark (peripheral stamp line)
G	: Dark blue link

- Install by aligning matching marks on each sprocket and timing chain.
- If these matching marks are not aligned, rotate the camshaft slightly to correct the position.

CAUTION:
- **Check matching mark position of each sprocket and timing chain again after installing the timing chain, keep matching marks aligned by holding them with a hand.**
- **To avoid skipped teeth, never rotate crankshaft and camshaft until front cover is installed.**

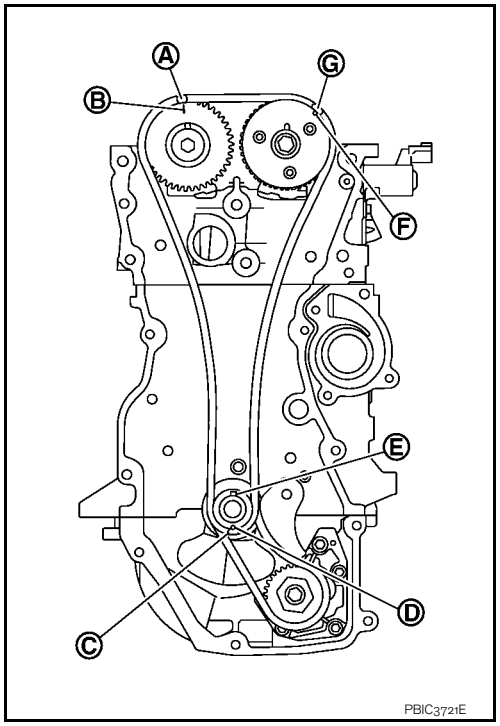

3. Install timing chain tension guide (2) and timing chain slack guide (1).

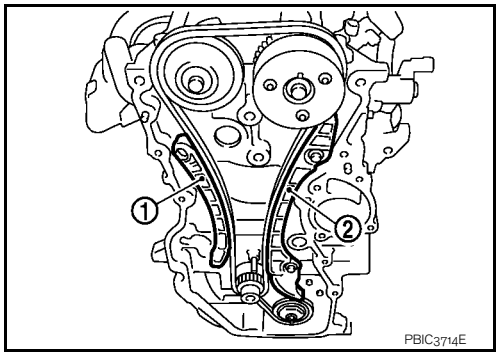

4. Install chain tensioner (1).
- Fix the plunger at the most compressed position using a stopper pin (A), and then install it.
- Securely pull out the stopper pin after installing the chain tensioner.

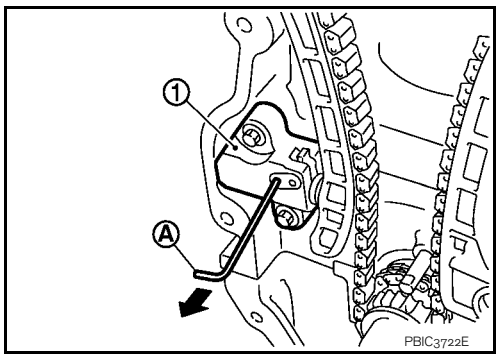

cardiagn.com

5. Check matching mark position of timing chain and each sprocket again.
6. Install the front oil seal to the front cover. Refer to EM-71, "FRONT OIL SEAL : Removal and Installation"
7. Install front cover with the following procedure:

a. Apply a continuous bead of liquid gasket with tube presser (commercial service tool) to front cover as shown in the figure.
Use Genuine Liquid Gasket or equivalent.

1 : Cylinder head
2 : Cylinder block
3 : Oil pan (upper)
A : Liquid gasket application area ϕ 3.0 - 4.0 mm (0.12 - 0.16 in)

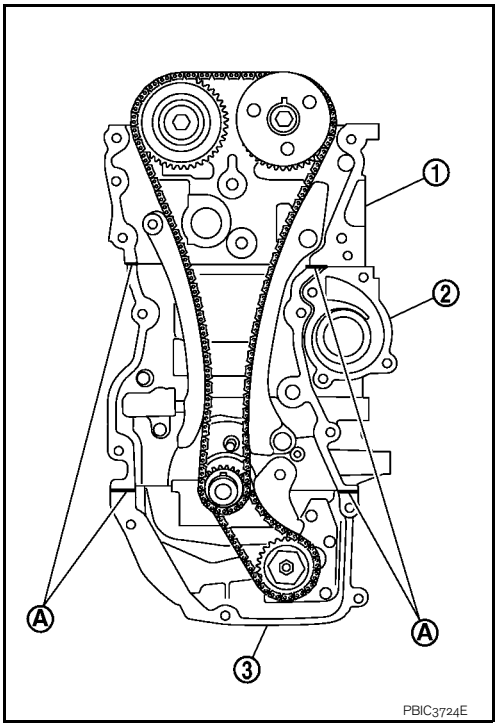

b. Apply a continuous bead of liquid gasket with tube presser (commercial service tool) to front cover as shown in the figure.
Use Genuine Liquid Gasket or equivalent.

A : Liquid gasket application area ϕ 3.0 - 4.0 mm (0.12 - 0.16 in)

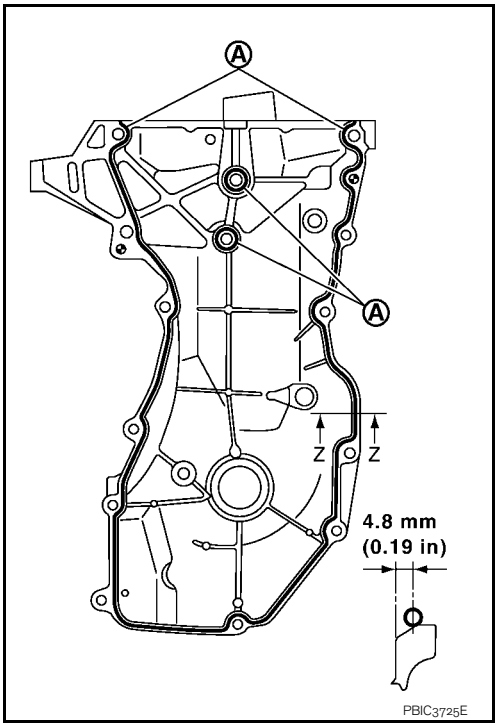

cardiagn.com

c. Tighten bolts in the numerical order shown in the figure.
d. After all bolts are tightened, retighten them to specified torque in numerical order as shown in the figure.
CAUTION:
Be sure to wipe off any excessive liquid gasket leaking to surface.

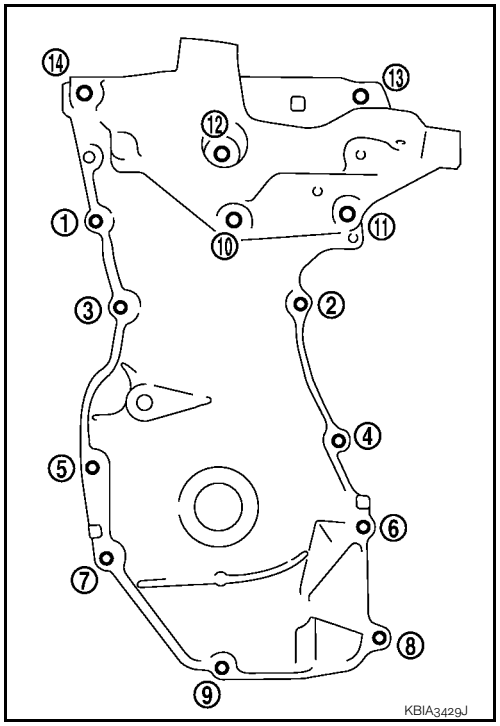

8. Insert crankshaft pulley by aligning with crankshaft key.
   - When inserting crankshaft pulley with a plastic hammer, tap on its center portion (not circumference).
   CAUTION:
   Never damage front oil seal lip section.
9. Tighten crankshaft pulley bolt with the following procedure:
   - Secure crankshaft pulley with a pulley holder (commercial service tool), and tighten crankshaft pulley bolt.

a. Apply new engine oil to thread and seat surfaces of crankshaft pulley bolt.
b. Tighten crankshaft pulley bolt.

: 35.0 N·m (3.6 kg-m, 26 ft-lb)

c. Put a paint mark (B) on crankshaft pulley, mating with any one of six easy to recognize angle marks (A) on crankshaft bolt flange (1).
d. Turn another 60 degrees clockwise (angle tightening).
   - Check the tightening angle with movement of one angle mark.

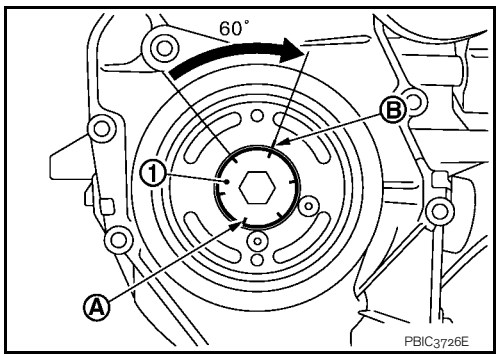

10. Make sure that crankshaft turns smoothly by rotating by hand clockwise.
11. Install in the reverse order of removal, for the rest of parts.

Inspection

INFOID:0000000000893861

INSPECTION AFTER REMOVAL

Timing Chain

cardiagn.com

Check for cracks and any excessive wear at link plates and roller links of timing chain. Replace timing chain as necessary.

A : Crack
B : Wear

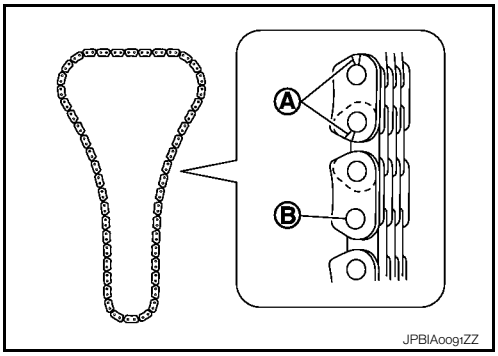

INSPECTION AFTER INSTALLATION

Inspection for Leaks

- Before starting engine, check oil/fluid levels including engine coolant and engine oil. If less than required quantity, fill to the specified level. Refer to MA-21, "Fluids and Lubricants".
- Use procedure below to check for fuel leakage.
  - Turn ignition switch “ON” (with engine stopped). With fuel pressure applied to fuel piping, check for fuel leakage at connection points.
  - Start engine. With engine speed increased, check again for fuel leakage at connection points.
- Run engine to check for unusual noise and vibration.

  NOTE:
  If hydraulic pressure inside chain tensioner drops after removal/installation, slack in guide may generate a pounding noise during and just after the engine start. However, this does not indicate an unusualness. Noise will stop after hydraulic pressure rises.
- Warm up engine thoroughly to make sure there is no leakage of fuel, or any oil/fluids including engine oil and engine coolant.
- Bleed air from lines and hoses of applicable lines, such as in cooling system.
- After cooling down engine, again check oil/fluid levels including engine oil and engine coolant. Refill to the specified level, if necessary.

Summary of the inspection items:

Items	Before starting engine	Engine running	After engine stopped
Engine coolant	Level	Leakage	Level
Engine oil	Level	Leakage	Level
Other oils and fluid*	Level	Leakage	Level
Fuel	Leakage	Leakage	Leakage

* Transmission/transaxle/CVT fluid, power steering fluid, brake fluid, etc.

cardiagn.com

CAMSHAFT

Exploded View

INFOID:0000000000893862

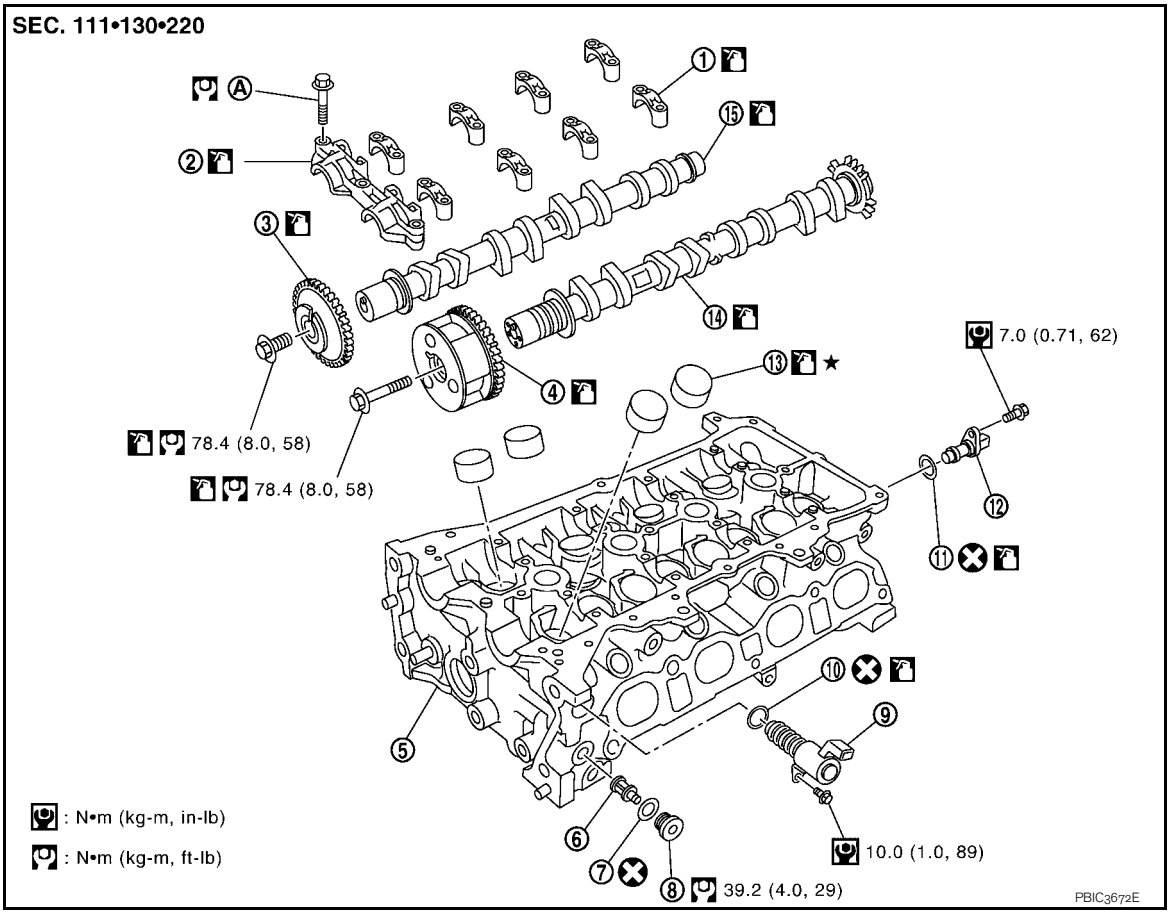

1.	Camshaft bracket (No. 2 to 5)	2.	Camshaft bracket (No.1)	3.	Camshaft sprocket (EXH)
4.	Camshaft sprocket (INT)	5.	Cylinder head	6.	Oil filter (for intake valve timing control)
7.	Washer	8.	Plug	9.	Intake valve timing control solenoid valve
10.	O-ring	11.	O-ring	12.	Camshaft position sensor (PHASE)
13.	Valve lifter	14.	Camshaft (INT)	15.	Camshaft (EXH)
A.	Refer to EM-55				

Refer to GI-4, "Components" for symbols in the figure.

Removal and Installation

INFOID:0000000000894025

CAUTION:
The rotation direction in the text indicates all directions seen from the engine front.

REMOVAL

NOTE:
This section describes the procedure for removal and installation of camshaft with front cover. If the front cover is removed first, change the following procedure.

- **Step 8 : After camshaft sprocket is removed, remove the camshaft brackets (No. 2 to 5).**
- **Step 9 : The camshaft (EXH) can be removed simultaneously with the camshaft (INT).**
- **Step 10 : When the camshaft sprocket (INT) mounting bolt is removed, the lifting up of camshaft is not necessary.**

cardiagn.com

1. Support the bottom surface of engine using a transmission jack, and then remove the engine mounting bracket and insulator (RH). Refer to EM-83, "Exploded View".
2. Remove rocker cover. Refer to EM-43, "Removal and Installation".
3. Remove camshaft position sensor (PHASE) from rear end of cylinder head.
   CAUTION:
   Handle it carefully and avoid impacts.
4. Place cylinder No. 1 at TDC of its compression stroke with the following procedure.

a. Rotate crankshaft pulley (2) clockwise and align TDC mark (without paint mark) (A) to timing indicator (1) on front cover.

B : White paint mark (Not use for service)

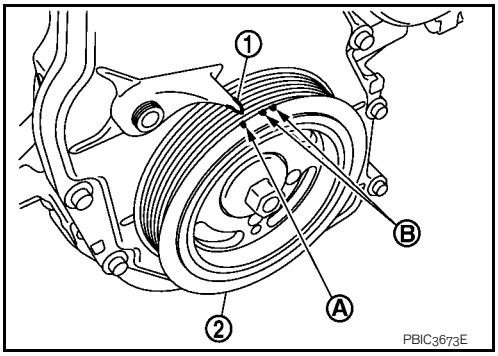

b. Make sure that the matching marks on each the camshaft sprockets are in the position shown in the figure.

1 : Timing chain
2 : Camshaft sprocket (EXH)
3 : Camshaft sprocket (INT)
A : Matching mark (Paint)
B : Matching mark (Stamp)
C : Matching mark (Peripheral stamp line)

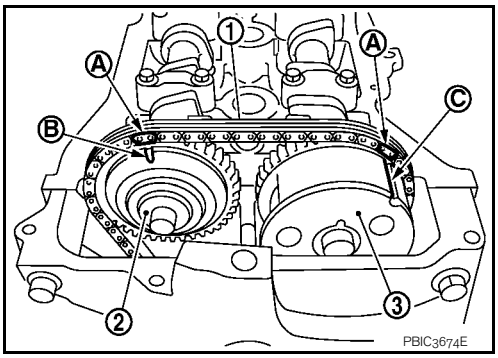

- If not, rotate crankshaft pulley one more turn to align matching marks to the positions in the figure.

c. Paint matching marks on the timing chain links

5. Secure the plunger of chain tensioner in the fully compressed position with the following procedure. And then, loosen the timing chain tension.

a. Remove the plug (2) from the front cover (1).

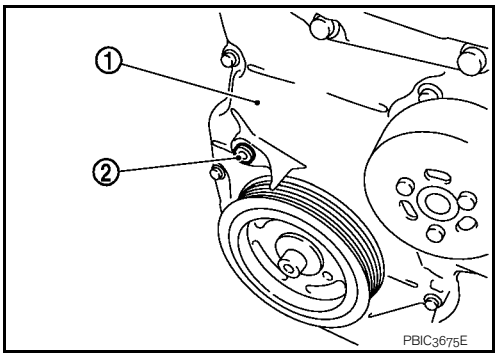

b. Fully push down the lever (B) of chain tensioner (2) from the plug hole, and then insert the stopper pin (A) into the body side hole and secure the lever at the lowest position.

C : Front cover has been omitted

- The tab is released by fully pushing the lever down. As a result, the plunger (1) can be moved.

NOTE:
Hexagonal wrench [2.5 mm (0.098 in)] is used for a stopper pin as an example.
CAUTION:

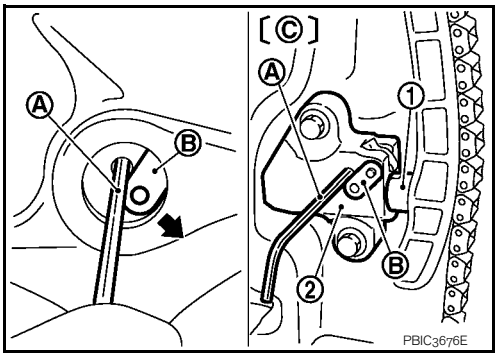

cardiagn.com

The stopper pin must use a shape that cannot fall in the front cover when dropping out.

c. Turn the crankshaft pulley (2) counterclockwise with the camshaft (EXH) (1) fixing. Apply the tension to the timing chain, and then push the plunger of into the inside of chain tensioner.
CAUTION:
Hold the camshaft hexagonal part (A), and then secure the camshaft.

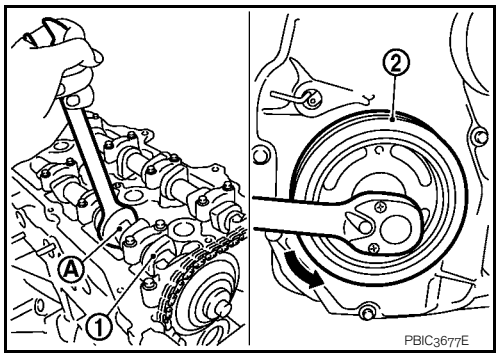

d. Pull out the stopper pin (A) of chain tensioner (2) side from plug hole. Lift the lever (B) up to align its hole position with the hole of the body.

D : Front cover has been omitted

- When the lever hole (C) is aligned with the body hole position, the plunger (1) is fixed.
- When the protrusion parts of the plunger ratchet and the tab face each other, both hole positions are not aligned. At that time, correctly engage them and align these hole positions by slightly moving the plunger.

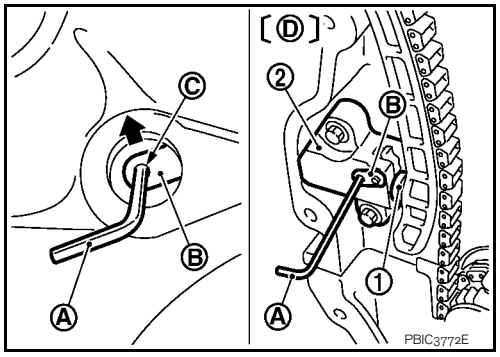

e. Insert the stopper pin into the body hole through the lever hole, and then fix the lever at the upper position.

f. Slightly rotate the crankshaft pulley (2) clockwise to loosen the timing chain on camshaft sprocket (EXH) (1) side.
CAUTION:
Hold the camshaft hexagonal part (A), and then secure the camshaft.

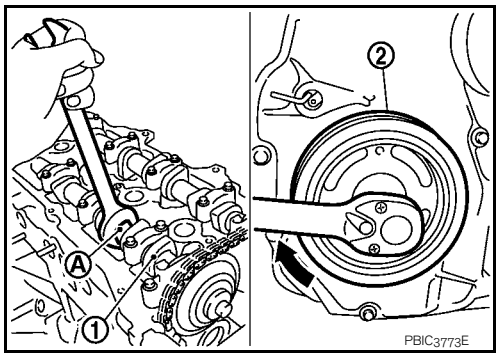

6. Remove camshaft sprocket (EXH) (1).
CAUTION:
- **Hold the camshaft hexagonal part (A), and then secure the camshaft.**
- **Never rotate crankshaft and camshaft separately, so as not to contact valve with piston in the following steps.**

NOTE:
The timing chain with the front cover installed is not disengaged from the crankshaft sprocket and it is not dropped into the front cover. Therefore, the timing chain tension holding device is not necessary.

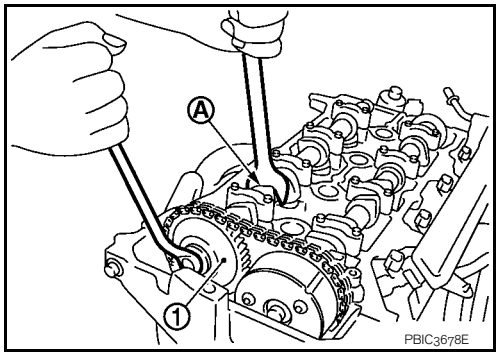

7. Turn the camshaft sprocket (INT) to the most advanced position.
CAUTION:
Installation and removal of the camshaft sprocket (INT) must be done in the most advanced position for the following reasons.

cardiagn.com

- **The sprocket (C) and vane (camshaft coupling) (B) are designed to spin and move within the range of a certain angle.**
- **With the engine stopped and the vane in the most retarded angle, it will not spin because it is locked to the sprocket side by the internal lock pin (A).**
- **If the camshaft sprocket mounting bolts are turned in the situation described above, the lock pin will become damaged and cause malfunctions because of the increased horizontal load (cutting force) on the lock pin.**

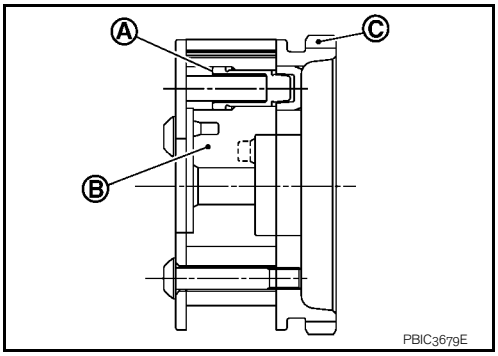

a. Remove camshaft bracket (No. 1) (1).

⇦ : Engine front

- Loosen the bolts in several steps, and then remove them.

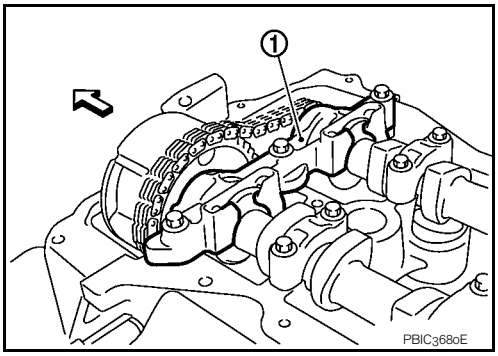

b. Apply the following air pressure to the No. 1 journal oil hole (A) of camshaft (INT) (1) shown in the figure using an air gun.

Pressure : 300 kPa (3.0 bar, 3.1 kg/cm^2 , 44 psi) or more

- Apply the air pressure into the oil hole on the second groove from the front of camshaft thrust (B).
- Proceed all the way through step “e” with the air pressure on.

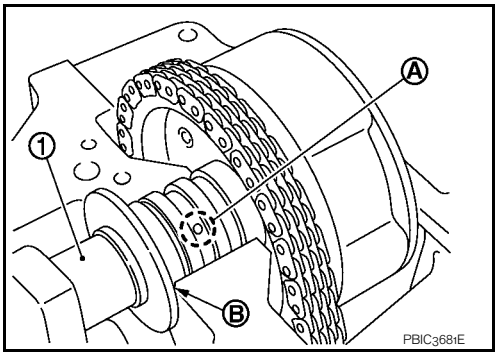

- Attach the rubber nozzle (B) narrowed to the top of the air gun (A) to prevent air leakage from the oil hole. Securely apply the air pressure to the oil hole.

CAUTION:

- **There are other oil holes in the side grooves. Never use the incorrect oil holes.**
- **Be sure not to damage the oil path with the tip of the air gun.**
- **Wipe all the oil off the air gun to prevent oil from being blown all over along with the air, and the area around the air gun should be wiped with a rag when applying air pressure. Eye protection should be worn as needed.**

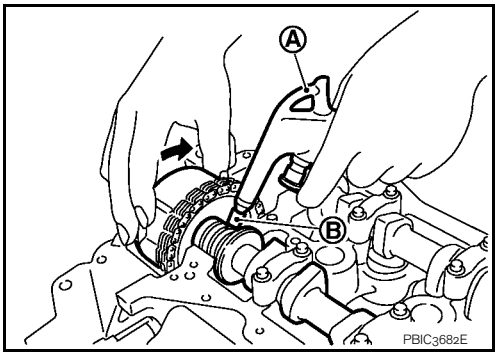

NOTE:

The air pressure is used to move the lock pin into the disengage position.

c. Hold the camshaft sprocket (INT) with hands, and then apply the power counterclockwise/clockwise alternatively.
- Finally rotate the sprocket of the camshaft sprocket (INT) counterclockwise [the direction shown by the arrow (⬅)].
- Perform the work while applying the air pressure to the oil hole.

cardiagn.com

- If the lock pin is not released by hands, tap the camshaft sprocket (INT) lightly with a plastic hammer (A).
- If the camshaft sprocket (INT) is not rotated counterclockwise even if the above procedures are performed, check the air pressure and the oil hole position.

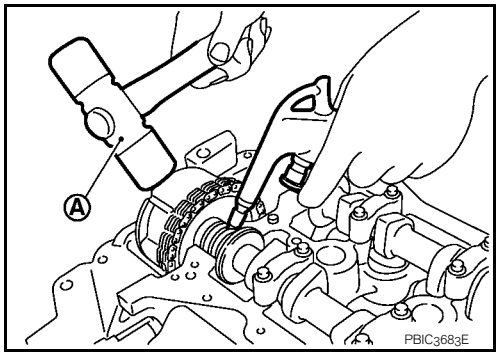

d. While doing the above, once you hear a click (the sound of the internal lock pin disengaging) from inside the camshaft sprocket (INT), start turning the camshaft sprocket (INT) in the counter-clockwise direction in the most advanced angle position.

C : Most retarded angle (lock pin engaged)
D : Most advanced angle

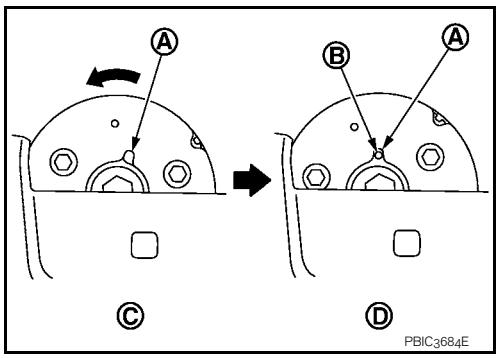

- Keep the air pressure on.
- If there is no click, as soon as the vane-side (camshaft side) starts moving independently of the sprocket, the lock pin has become disengaged.
- Make sure that it is in the most advanced angle position by seeing if the stopper pin groove (A) and the stopper pin hole (B) are matched up as shown in the figure.

e. Complete the applying procedure of air pressure and the holding procedure of camshaft (INT).

f. Insert the stopper pin (A) into the stopper pin holes in the camshaft sprocket (INT) and lock in the most advanced angle position.

CAUTION:
No load is exerted on the stopper pin (spring reaction, etc.). Since it comes out easily, secure it with tape (B) to prevent it from coming out.
NOTE:
The stopper pin in the figure shows one example of a hexagonal wrench for 2.5 mm (0.098 in) [length of inserted section: approximately15 mm (0.59 in)].

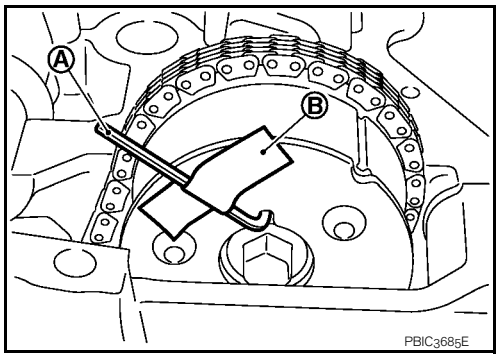

8. Remove camshaft brackets (No. 2 to 5).
- Loosen bolts in several steps in the reverse of the order shown in the figure.

A : EXH side
B : INT side
⇦ : Engine front

NOTE:
The camshaft bracket (No. 1) has been already removed.

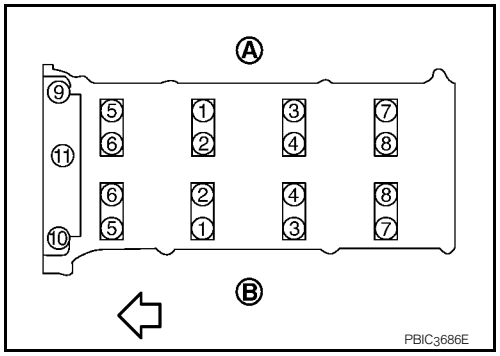

9. Remove camshaft (EXH).

cardiagn.com

10. Remove the camshaft (INT) (1) and the camshaft sprocket (INT) (2) with the following procedure.

a. Lift up the camshaft sprocket (INT), and then set the thin tools (a box wrench, etc.) to the mounting bolt (A).

b. Return the camshaft (INT) to the cylinder head journal quietly.

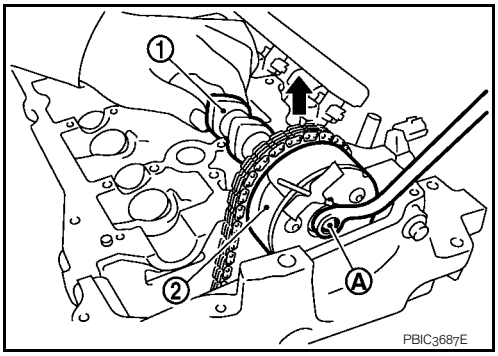

c. Keeping the camshaft hexagonal part (A) still with the wrench, loosen mounting the bolts for the camshaft sprocket (INT) (2).

1 :Camshaft (INT)

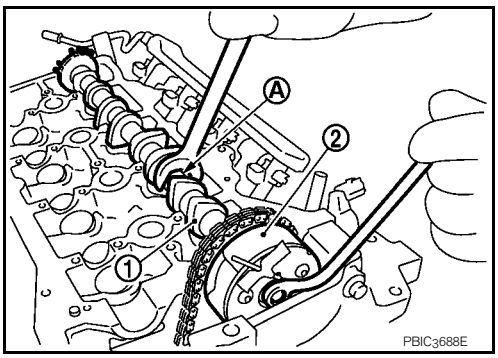

d. Lift up the camshaft (INT) (1), and then disassemble the camshaft from the camshaft sprocket (INT) (2).

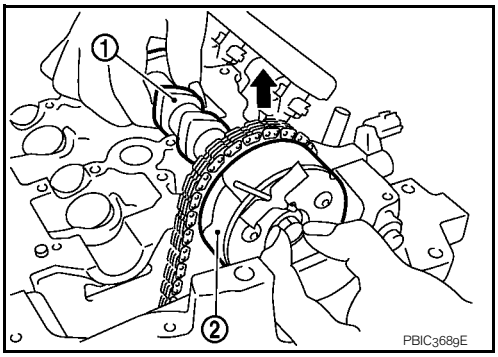

e. Remove camshaft (INT) rearward.
CAUTION:
Never damage the signal plate of rear end.

f. Remove camshaft sprocket (INT) (1).
CAUTION:
Never drop stopper pin.

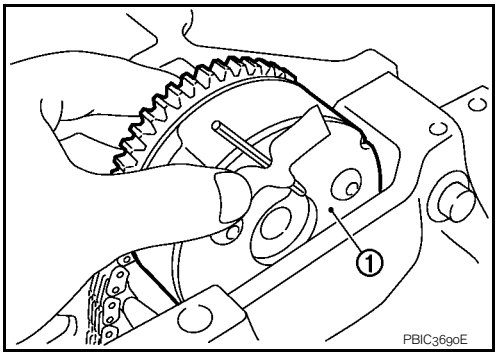

CAUTION:

cardiagn.com

- **Tape (C) the stopper pin (B) so it does not come out.**
- **Never subject it to impact by dropping.**
- **Never disassemble. [Never loosen the three mounting bolts (A)].**

NOTE:
While removing the camshaft sprocket (INT), if you have taken out the stopper pin and the lock pin has been rejoined in the most retarded angle, do the following to restore it.

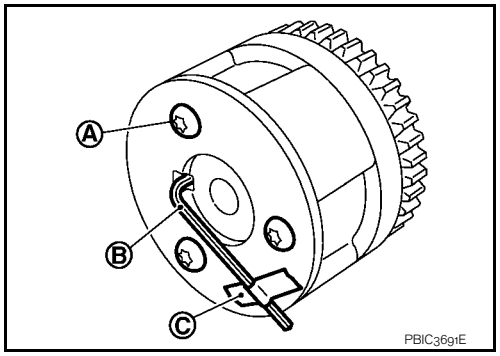

i. Install the camshaft (INT) and tighten the mounting bolts enough to prevent air from leaking out.
CAUTION:
The internal lock pin will get damaged, so keep the torque on the mounting bolts to the minimum required to prevent air from escaping.

ii. Apply the air pressure, disengage the lock pin, and turn the vane to the most advanced angle position.

iii. Insert the stopper pin.

iv. Remove camshaft sprocket (INT) from the camshaft.

11. Remove valve lifter.
    - Identify installation positions, and store them without mixing them up.
12. Remove intake valve timing control solenoid valve (1).
13. Remove the alternator and bracket, remove the plug (2), and then remove the oil filter. Refer to CHG-25, "HR16DE MODELS : Exploded View".

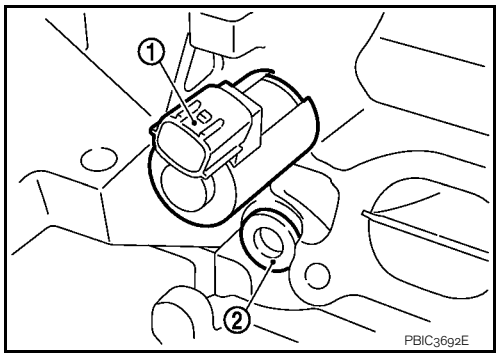

INSTALLATION

1. Install the oil filter (1).

   2 : Washer

   - The oil filter is assembled to the plug (3), and then install it to the cylinder head.

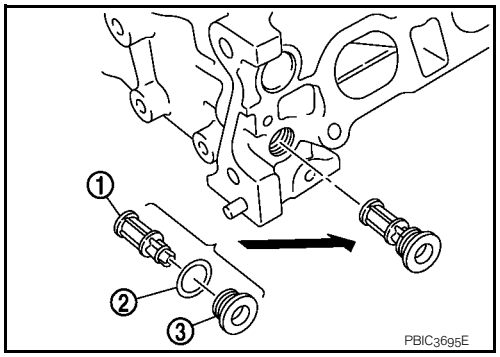

2. Install intake valve timing control solenoid valve.
   - Insert it straightly into the cylinder head.
   - Tighten bolts after placing it completely.
3. Install valve lifter.
   - If it is reused, install in its original positions.
4. Put a matching mark for positioning the camshaft (INT) and the camshaft sprocket (INT) with the following procedure.
   NOTE:
   It prevents the knock pin from engaging with the incorrect pin hole after installing the camshaft (INT) and the camshaft sprocket (INT).

cardiagn.com

a. Put the matching marks (A) on a line extending from the knock pin position of camshaft (INT) (1) front surface.
   - Put the marks on the visible position with the camshaft sprocket installed. (The figure shows an example.)

b. Put the matching marks on a line extending from the knock pin hole (B) position of camshaft sprocket (INT) (2). (The figure shows an example.)
   - Put the marks on the visible position with it installed to the camshaft.

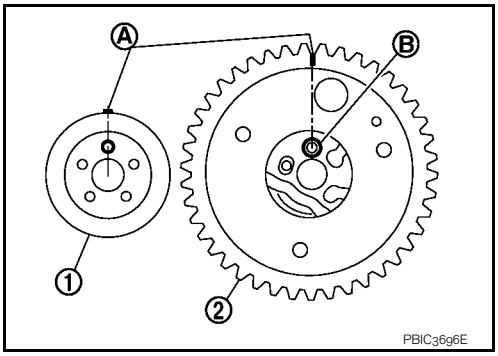

5. Set the camshaft sprocket (INT) to between cylinder head and front cover.
   - Set it with the knock pin hole (A) facing up.

   CAUTION:
   Make sure the stopper pin is inserted at the most advanced position beforehand.

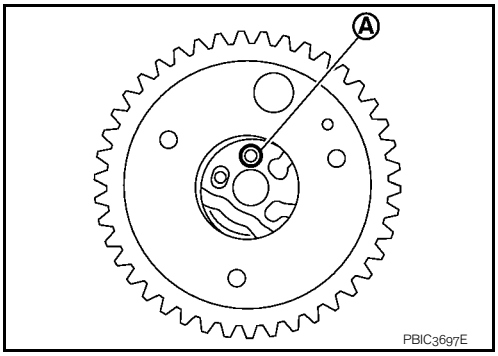

6. Install camshaft.

   1 : Camshaft (EXH)
   2 : Camshaft (INT)
   A : Identification mark

   - Distinction between camshaft (INT and EXH) is performed with the different shapes of rear end.

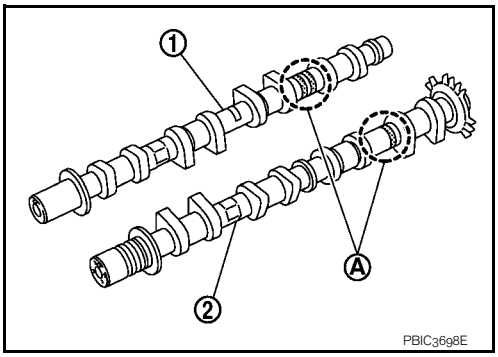

   - Install camshafts to the cylinder head so that knock pins (A) on front end are positioned as shown in the figure.

   1 : Camshaft (EXH)
   2 : Camshaft (INT)
   ⇦ : Upper side

   NOTE:
   Though camshaft does not stop at the portion as shown in the figure, for the placement of cam nose, it is generally accepted camshaft is placed for the same direction of the figure.

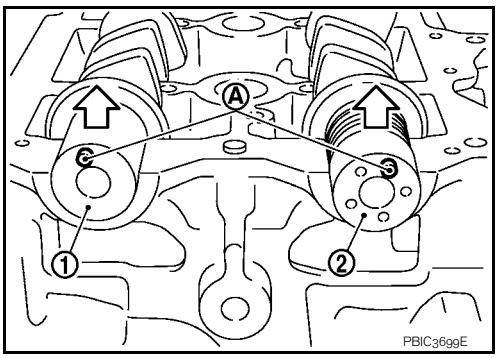

7. Install the camshaft sprocket (INT) to the camshaft (INT) with the following procedure.

a. Refer to the matching mark (A) put according to step “4”. Securely align the knock pin and the pin hole, and then install them.

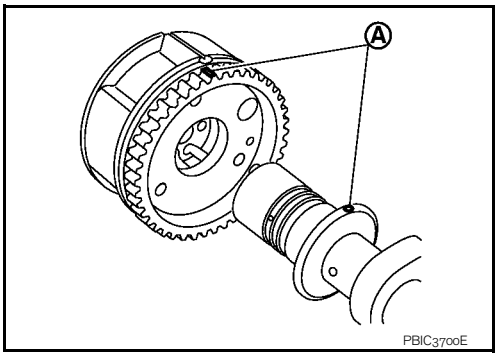

cardiagn.com

b. Lift up the front side of camshaft (INT) (1), and then temporarily tighten the bolt.

2 : Camshaft sprocket (INT)

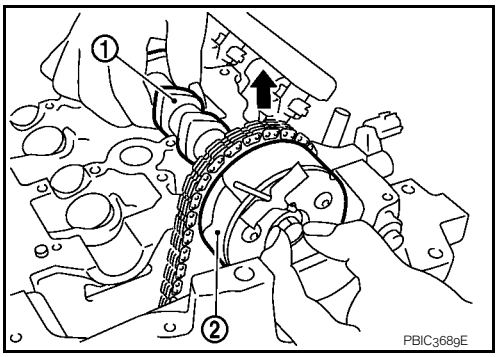

8. Put a thick shop cloth (B) to the lower surface, and then set the tools to the bolt while lifting up the front side of camshaft (INT) (1).
9. Tighten the mounting bolt.
CAUTION:
Hold the camshaft hexagonal part (A), and then secure the camshaft.

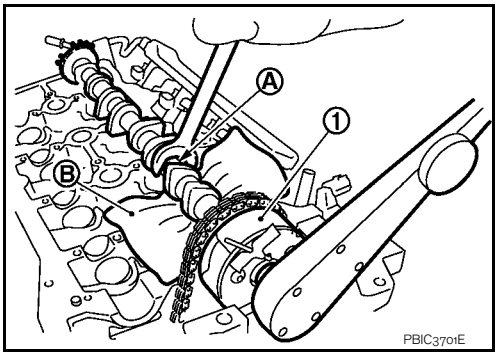

10. Return the camshaft (INT) to the cylinder head quietly.
11. Install timing chain (1) by aligning its matching mark (marked when timing chain is removed) (B) with matching mark (peripheral stamp line) (A) on camshaft sprocket (INT) (2).

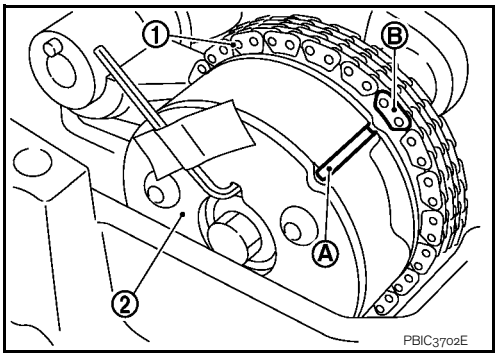

12. Install camshaft brackets (No. 2 to 5) aligning the identification marks on upper surface as shown in the figure.

A : EXH side
B : INT side
⇦ : Engine front

- Install so that identification mark can be correctly read when viewed from the INT side.

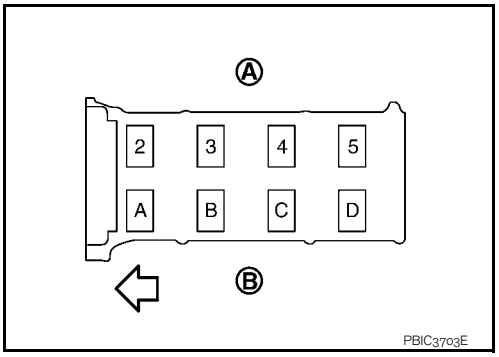

cardiagn.com

13. Tighten mounting bolts of camshaft brackets in the following steps, in numerical order as shown in the figure.

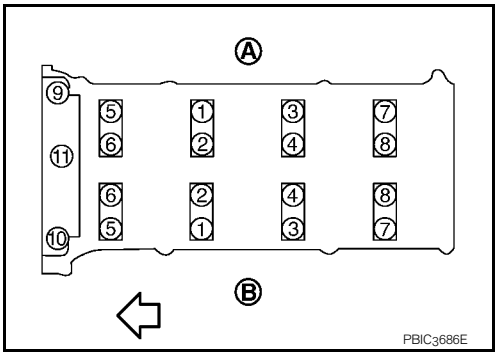

A : EXH side
B : INT side
⇦ : Engine front

a. Tighten No. 9 to 11 in numerical order.

: 2.0 N·m (0.2 kg-m, 1 ft-lb)

b. Tighten No. 1 to 8 in numerical order.

: 2.0 N·m (0.2 kg-m, 1 ft-lb)

c. Tighten all bolts in numerical order.

: 5.9 N·m (0.6 kg-m, 4 ft-lb)

d. Tighten all bolts in numerical order.

: 10.4 N·m (1.1 kg-m, 8 ft-lb)

14. Install the camshaft (EXH) to the camshaft sprocket (EXH) (2) while aligning the matching make (marked when timing chain is removed) (A) and the matching mark (stamp) (B) of camshaft sprocket (EXH).

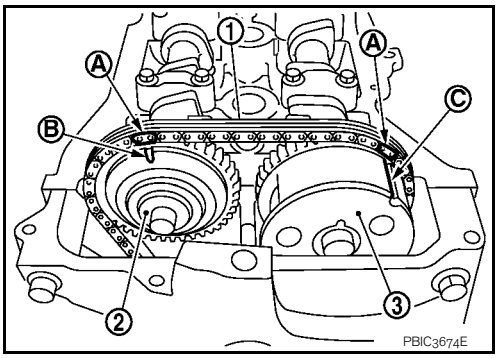

1 : Timing chain
3 : Camshaft sprocket (INT)
C : Matching mark (peripheral stamp line)

- If the positions of knock pin and pin groove are not aligned, move the camshaft (EXH) slightly to correct these positions.

15. Tighten the mounting bolt.

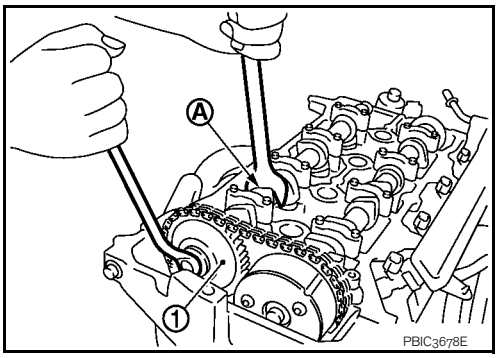

1 : Camshaft sprocket (EXH)

CAUTION:
- **Hold the camshaft hexagonal part (A), and then secure the camshaft.**
- **Make sure that the matching mark (marked when timing chain is removed) and each camshaft sprocket matching mark are in the correct location.**

16. Pull out the stopper pin (A), and then apply the tension to the timing chain by rotating the crankshaft pulley clockwise slightly.

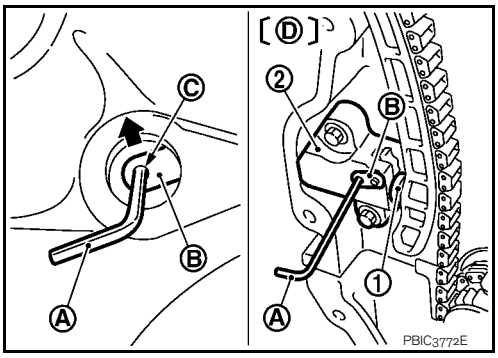

1 : Plunger
2 : Chain tensioner
B : Lever
C : Lever hole
D : Front cover has been omitted

cardiagn.com

17. Install the plug (2) to the front cover (1).
    - Apply liquid gasket to the threads, and tighten them.
    Use Genuine Liquid Gasket or equivalent.

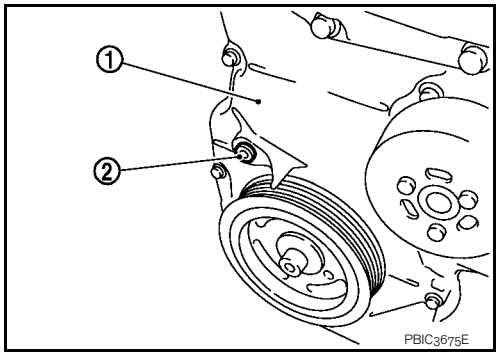

18. Return the camshaft sprocket (INT) in the most retarded position with the following procedure.

a. Remove the stopper pin (A) from the camshaft sprocket (INT).

B : Tape

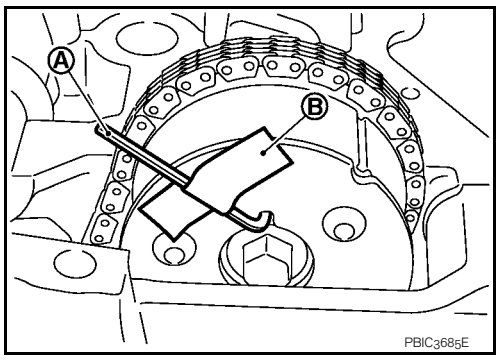

b. Turn the crankshaft pulley (1) slowly clockwise (A) and return the camshaft sprocket (INT) to the most retarded angle position.

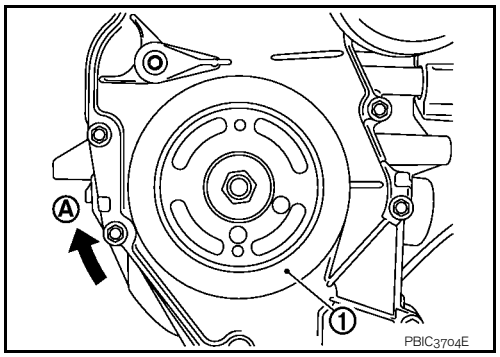

- When first turning the crankshaft the camshaft sprocket (INT) will turn. Once it is turned more, and the vane (camshaft) also turns, then it has reached the most retarded angle position.

B : Stopper pin hole
C : Most advanced angle
D : Most retarded angle (lock pin engaged)

- The most retarded angle position can be checked by seeing if the stopper pin groove (A) is shifted clockwise.
- After spinning the crankshaft slightly in the counterclockwise direction, you can make sure the lock pin has joined by seeing if the vane (camshaft) and the sprocket move together.

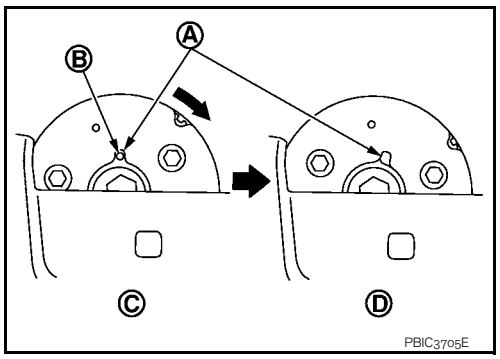

19. Install the camshaft position sensor (PHASE) to the rear end of cylinder head.
    - Tighten bolts with it seated completely.
20. Check and adjust valve clearance. Refer to EM-21, "Inspection and Adjustment".
21. Install in the reverse order of removal, for the rest of parts.

Inspection

INFOID:0000000000893864

INSPECTION AFTER REMOVAL

cardiagn.com

Oil Filter

- Make sure that there is no foreign material on the oil filter (1) and check it for clogging.
- Check the oil filter for damage.
- If there is some damage, replace the oil filter, the plug, and the washer as a set.

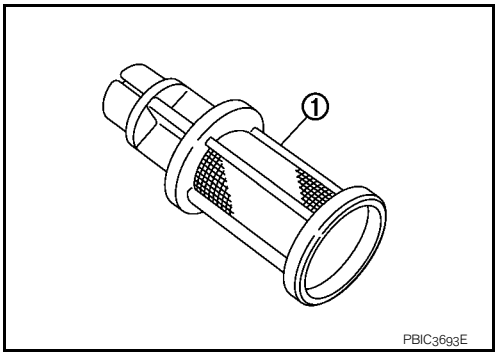

Camshaft Runout

1. Put V-block on a precise flat table, and support No. 2 and 5 journals of camshaft.
   CAUTION:
   Never support No. 1 journal (on the side of camshaft sprocket) because it has a different diameter from the other four locations.
2. Set a dial indicator vertically to No. 3 journal.
3. Turn camshaft to one direction with hands, and measure the camshaft runout on the dial indicator. (Total indicator reading)

   Standard and Limit:

   Refer to EM-116, "Camshaft".

4. If it exceeds the limit, replace camshaft.

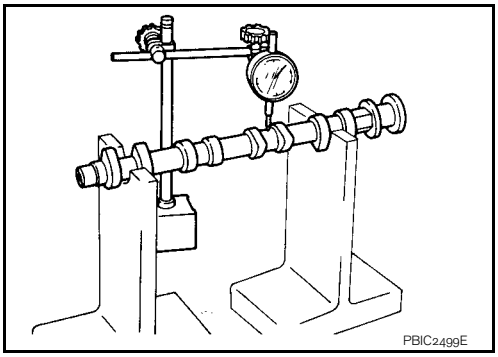

Camshaft Cam Height

1. Measure the camshaft cam height with a micrometer (A).

   Standard and Cam wear Limit:

   Refer to EM-116, "Camshaft".

2. If wear exceeds the limit, replace camshaft.

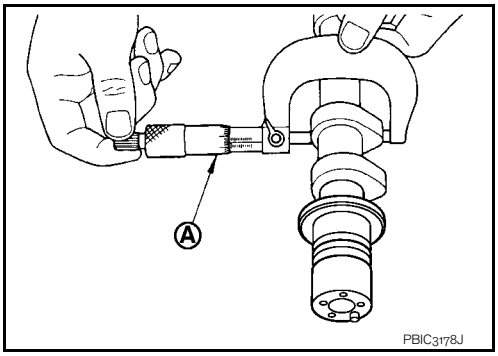

Camshaft Journal Oil Clearance

CAMSHAFT JOURNAL DIAMETER

Measure the outer diameter of camshaft journal with a micrometer (A).

Standard: Refer to EM-116, "Camshaft".

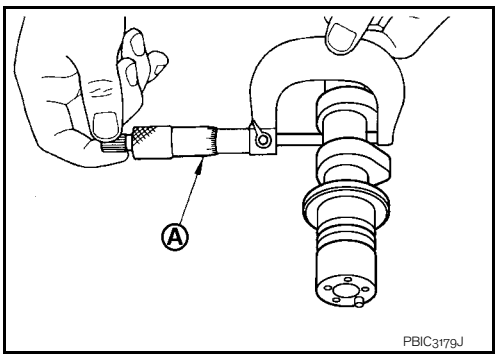

CAMSHAFT BRACKET INNER DIAMETER

- Tighten camshaft bracket bolts with the specified torque. Refer to EM-55, "Removal and Installation".

cardiagn.com

- Measure inner diameter (B) of camshaft bracket with a bore gauge (A).

Standard: Refer to EM-116, "Camshaft".

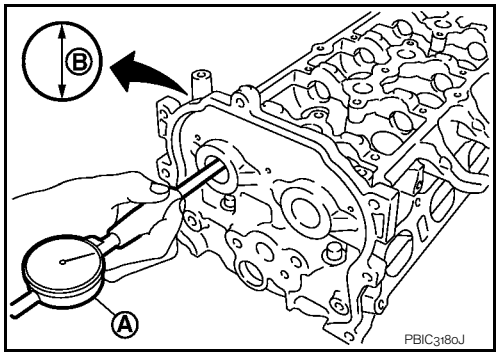

CAMSHAFT JOURNAL OIL CLEARANCE

- (Oil clearance) = (Camshaft bracket inner diameter) – (Camshaft journal diameter)

Standard and Limit: Refer to EM-116, "Camshaft".

- If it exceeds the limit, replace either or both camshaft and cylinder head.
  NOTE:
  Camshaft brackets cannot be replaced as single parts, because they are machined together with cylinder head. Replace whole cylinder head assembly.

Camshaft End Play

1. Install camshaft in cylinder head. Refer to EM-55, "Removal and Installation".
2. Install a dial indicator (A) in thrust direction on front end of camshaft. Measure the camshaft end play on the dial indicator when camshaft is moved forward/backward (in direction to axis).

Standard and Limit: Refer to EM-116, "Camshaft".

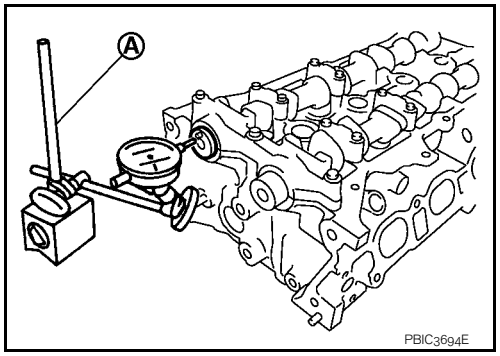

- Measure the following parts if out of the standard.
  - Dimension “A” for cylinder head No. 1 journal bearing

Standard : 4.000 - 4.030 mm (0.1575 - 0.1587 in)

  - Dimension “B” for camshaft thrust

Standard : 3.877 - 3.925 mm (0.1526 - 0.1545 in)

- Refer to the standards above, and then replace camshaft and/or cylinder head.

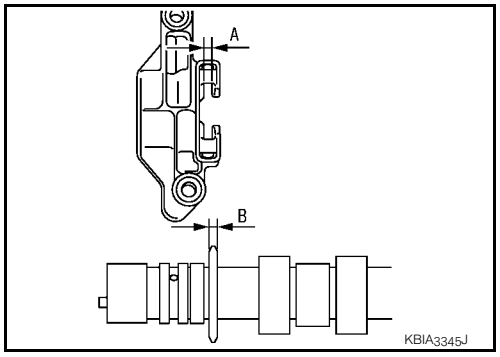

Camshaft Sprocket Runout

1. Put V-block on precise flat table, and support No. 2 and 5 journals of camshaft.
   CAUTION:
   Never support No. 1 journal (on the side of camshaft sprocket) because it has a different diameter from the other four locations.

cardiagn.com

2. Measure the camshaft sprocket runout with a dial indicator. (Total indicator reading)

Limit: Refer to EM-116, "Camshaft".

- If it exceeds the limit, replace camshaft sprocket.

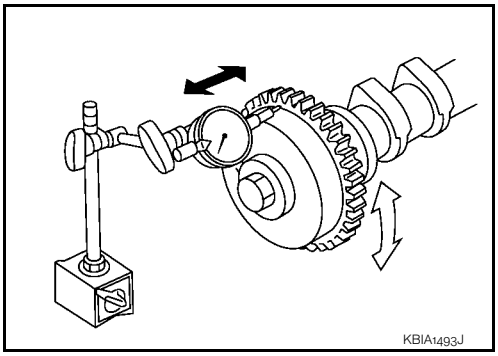

Valve Lifter

Check if surface of valve lifter has any wear or cracks.

- If anything above is found, replace valve lifter. Refer to EM-116, "Camshaft".

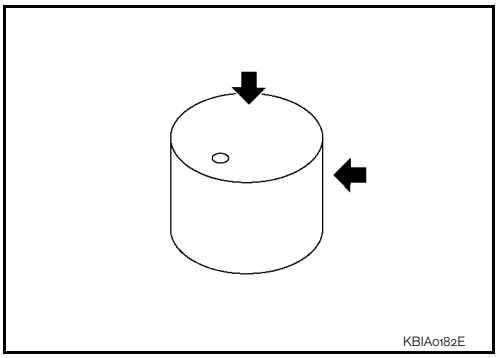

Valve Lifter Clearance

VALVE LIFTER OUTER DIAMETER

Measure the outer diameter of valve lifter with a micrometer (A).

Standard: Refer to EM-116, "Camshaft".

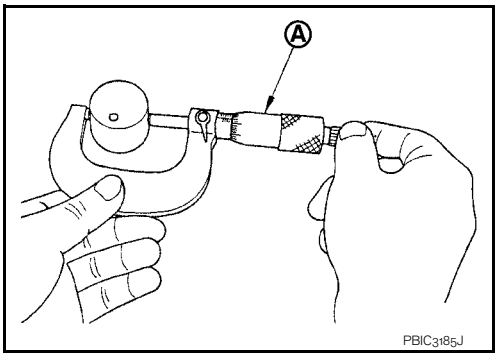

VALVE LIFTER HOLE DIAMETER

Measure the diameter of valve lifter hole of cylinder head with an inside micrometer (A).

Standard: Refer to EM-116, "Camshaft".

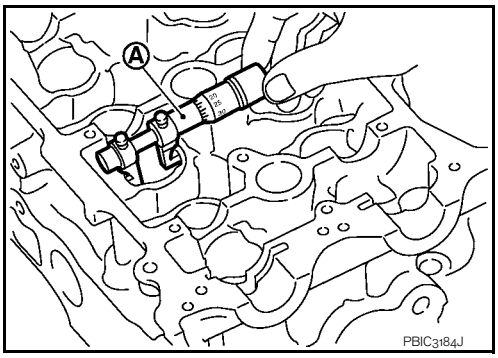

VALVE LIFTER CLEARANCE

- (Valve lifter clearance) = (Valve lifter hole diameter) – (Valve lifter outer diameter)

Standard: Refer to EM-116, "Camshaft".

- If out of the standard, referring to the each standard of valve lifter outer diameter and valve lifter hole diameter, replace either or both valve lifter and cylinder head.

INSPECTION AFTER INSTALLATION

cardiagn.com

Inspection for Leaks

The following are procedures for checking fluids leak, lubricates leak.

- Before starting engine, check oil/fluid levels including engine coolant and engine oil. If less than required quantity, fill to the specified level. Refer to MA-21, "Fluids and Lubricants".
- Use procedure below to check for fuel leakage.
  - Turn ignition switch “ON” (with engine stopped). With fuel pressure applied to fuel piping, check for fuel leakage at connection points.
  - Start engine. With engine speed increased, check again for fuel leakage at connection points.
- Run engine to check for unusual noise and vibration.

  NOTE:

  If hydraulic pressure inside timing chain tensioner drops after removal/installation, slack in the guide may generate a pounding noise during and just after engine start. However, this is normal. Noise will stop after hydraulic pressure rises.
- Warm up engine thoroughly to make sure there is no leakage of fuel, or any oil/fluids including engine oil and engine coolant.
- Bleed air from lines and hoses of applicable lines, such as in cooling system.
- After cooling down engine, again check oil/fluid levels including engine oil and engine coolant. Refill to the specified level, if necessary.

Summary of the inspection items:

Items	Before starting engine	Engine running	After engine stopped
Engine coolant	Level	Leakage	Level
Engine oil	Level	Leakage	Level
Other oils and fluid*	Level	Leakage	Level
Fuel	Leakage	Leakage	Leakage

*: Transmission/transaxle/CVT fluid, power steering fluid, brake fluid, etc.

Inspection of Camshaft Sprocket (INT) Oil Groove

CAUTION:

- **Perform this inspection only when DTC P0011 is detected in self-diagnostic results of CONSULT-III and it is directed according to inspection procedure of EC section. Refer to EC-87, "Diagnosis Description".**
- **Check when engine is cold so as to prevent burns from the splashing engine oil.**

1. Check engine oil level. Refer to LU-6, "Inspection".
2. Perform the following procedure so as to prevent the engine from being unintentionally started while checking.

a. Release the fuel pressure. Refer to EC-357, "Inspection".

b. Remove intake manifold. Refer to EM-29, "Exploded View".

c. Disconnect ignition coil and injector harness connectors. Refer to EM-43, "Exploded View".

3. Remove intake valve timing control solenoid valve. Refer to EM-46, "Exploded View".
4. Crank engine, and then make sure that engine oil comes out from intake valve timing control solenoid valve hole (A). End crank after checking.

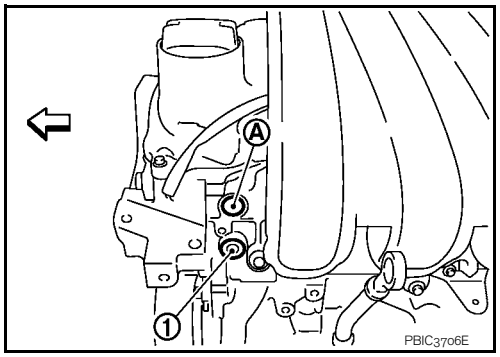

1 : Plug

⇦ :Engine front

WARNING:

Be careful not to touch rotating parts (drive belts, idler pulley, and crankshaft pulley, etc.).

CAUTION:

- **Prevent splashing by using a shop cloth so as to prevent the worker from injury from engine oil and so as to prevent engine oil contamination.**
- **Prevent splashing by using a shop cloth so as to prevent engine oil from being splashed to engine and vehicle. Especially, be careful not to apply engine oil to rubber parts of drive belts, engine mounting insulator, etc. Wipe engine oil off immediately if it is splashed.**

cardiagn.com

5. Perform the following inspection if engine oil does not come out from intake valve timing control solenoid valve oil hole of the cylinder head.
   - Remove oil filter, and then clean it. Refer to EM-65, "Inspection".
   - Clean oil groove between oil strainer and intake valve timing control solenoid valve. Refer to LU-3, "Engine Lubrication System" and LU-3, "Engine Lubrication System Schematic".
6. Remove components between intake valve timing control solenoid valve and camshaft sprocket (INT), and then check each oil groove for clogging.
   - Clean oil groove if necessary. Refer to LU-3, "Engine Lubrication System" and LU-3, "Engine Lubrication System Schematic".
7. After inspection, install removed parts in the reverse order.

cardiagn.com

OIL SEAL

VALVE OIL SEAL

VALVE OIL SEAL : Removal and Installation

INFOID:0000000000893865

REMOVAL

1. Remove camshafts. Refer to EM-55, "Exploded View".
2. Remove valve lifters. Refer to EM-55, "Exploded View".
3. Rotate crankshaft, and set piston whose valve oil seal is to be removed to TDC. This will prevent valve from dropping into cylinder.
   CAUTION:
   When rotating crankshaft, be careful to avoid scarring front cover with timing chain.
4. Remove valve collet.
   - Compress valve spring with the valve spring compressor, the attachment and the adapter [SST: KV10116200] (A). Remove valve collet with a magnet hand (B).
   CAUTION:
   Be careful not to damage valve lifter holes.

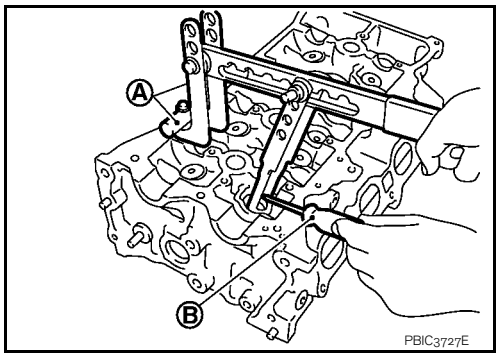

5. Remove valve spring retainer, valve spring and valve spring seat. Refer to EM-74, "Exploded View".
6. Remove valve oil seal with the valve oil seal puller [SST: KV10107902] (A).

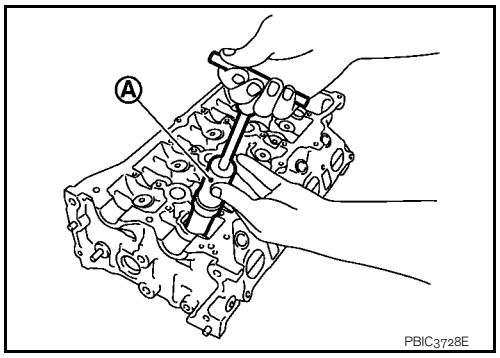

INSTALLATION

1. Apply new engine oil to valve oil seal joint surface and seal lip.
2. Press in valve oil seal to the height “H” shown in the figure with the valve oil seal drift [SST: KV10115600] (A).

   Height “H” : 13.2 - 13.8 mm (0.520 - 0.543 in)

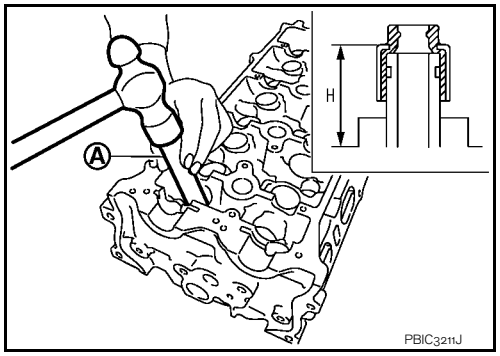

3. Install in the reverse order of removal, for the rest of parts.

FRONT OIL SEAL

FRONT OIL SEAL : Removal and Installation

INFOID:0000000000893866

cardiagn.com

REMOVAL

1. Remove the following parts:
   - Front fender protector (RH): Refer to EXT-21, "Exploded View".
   - Drive belt: Refer to EM-16, "Removal and Installation".
   - Crankshaft pulley: Refer to EM-46, "Exploded View".
2. Remove front oil seal using a suitable tool.
   CAUTION:
   Be careful not to damage front timing chain case and crankshaft.

INSTALLATION

1. Apply new engine oil to both oil seal lip and dust seal lip of new front oil seal.
2. Install front oil seal.
   - Install front oil seal so that each seal lip is oriented as shown in the figure.

     A : Dust seal lip
     B : Oil seal lip
     ⇦ : Engine outside
     ⬅ : Engine inside

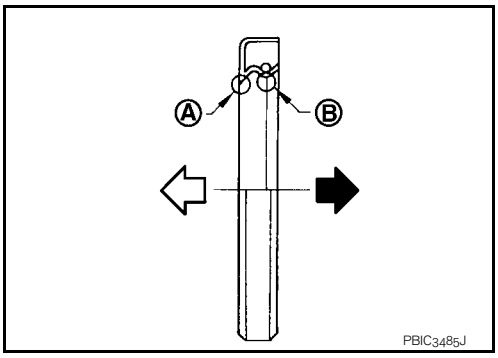

   - Using a suitable drift, press-fit until the height of front oil seal (2) is level with the mounting surface.

     1 : Front cover
     ⇦ : Engine outside

   - Suitable drift (A): outer diameter 50 mm (1.97 in), inner diameter 44 mm (1.73 in).
   - Make sure the garter spring is in position and seal lips not inverted

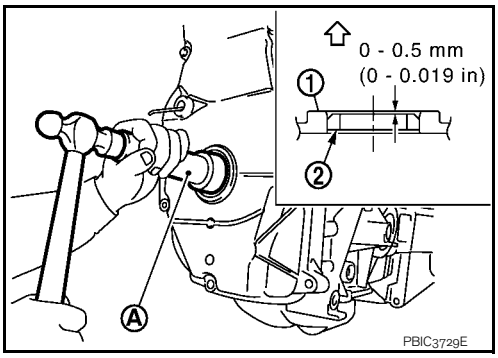

   CAUTION:
   - **Be careful not to damage front timing chain case and crankshaft.**
   - **Press-fit straight and avoid causing burrs or tilting oil seal.**
3. Install in the reverse order of removal, for the rest of parts.

REAR OIL SEAL

REAR OIL SEAL : Removal and Installation

INFOID:0000000000893867

REMOVAL

1. Remove transaxle assembly. Refer to TM-23, "Exploded View".
2. Remove clutch cover and clutch disk. Refer to CL-16, "HR16DE, MR20DE : Exploded View".
3. Remove flywheel. Refer to EM-93, "Exploded View".
4. Remove rear oil seal with a suitable tool.
   CAUTION:
   Be careful not to damage crankshaft and cylinder block.

INSTALLATION

1. Apply the liquid gasket lightly to entire outside area of new rear oil seal.
   Use Genuine Liquid Gasket or equivalent.

cardiagn.com

2. Install rear oil seal so that each seal lip is oriented as shown in the figure.

A : Dust seal lip
B : Oil seal lip
⇦ : Engine outside
⬅ : Engine inside

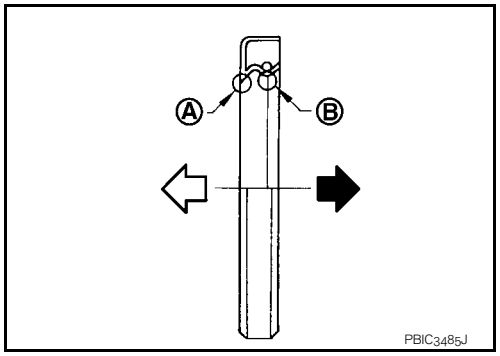

- Press-fit rear oil seal with a drift outer diameter 113 mm (4.45 in) and inner diameter 90 mm (3.54 in) (commercial service tool) (A).

CAUTION:
- **Be careful not to damage crankshaft and cylinder block.**
- **Press-fit oil seal straight to avoid causing burrs or tilting.**
- **Never touch grease applied onto oil seal lip.**

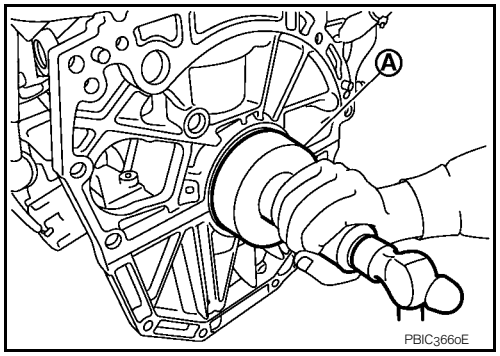

- Press in rear oil seal (1) to the position as shown in the figure.

A : Rear end surface of cylinder block

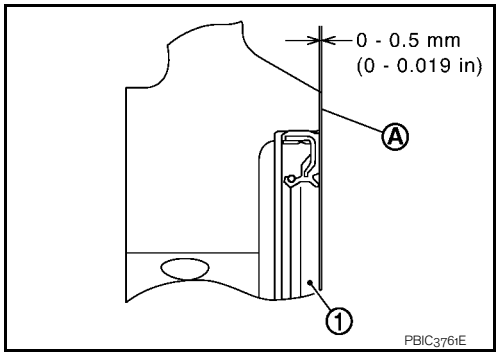

3. After press-fitting rear oil seal, completely wipe off any liquid gasket protruding to rear end surface side.
4. Install in the reverse order of removal, for the rest of parts.

cardiagn.com

CYLINDER HEAD

Exploded View

INFOID:0000000000943691

REMOVAL

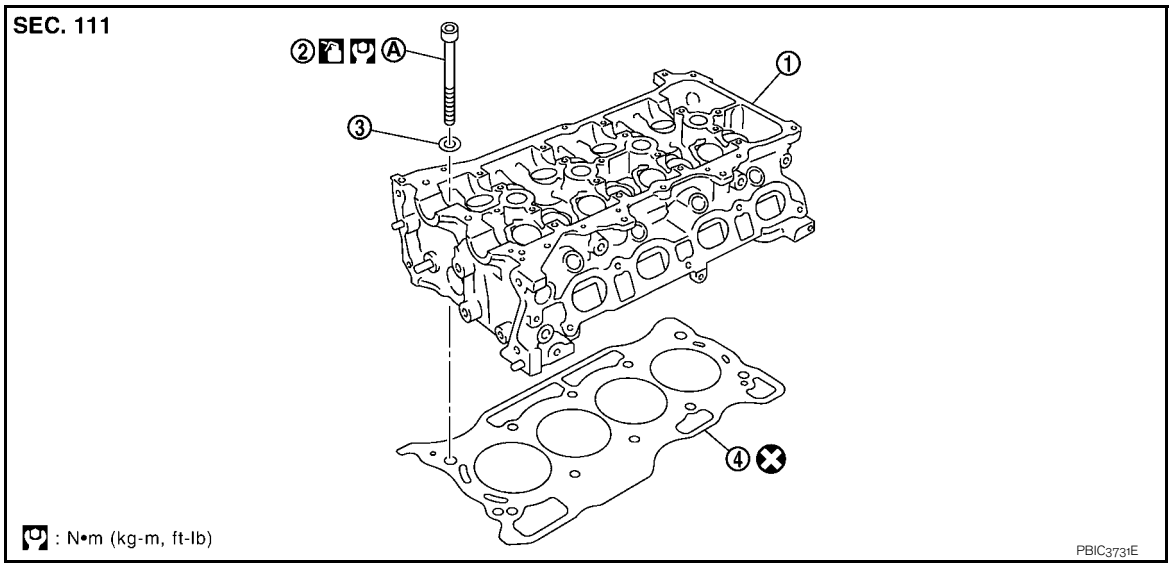

1. Cylinder head assembly
2. Cylinder head bolt
3. Washer
4. Cylinder head gasket

A. Refer to EM-75

Refer to GI-4, "Components" for symbols in the figure.

DISASSEMBLY

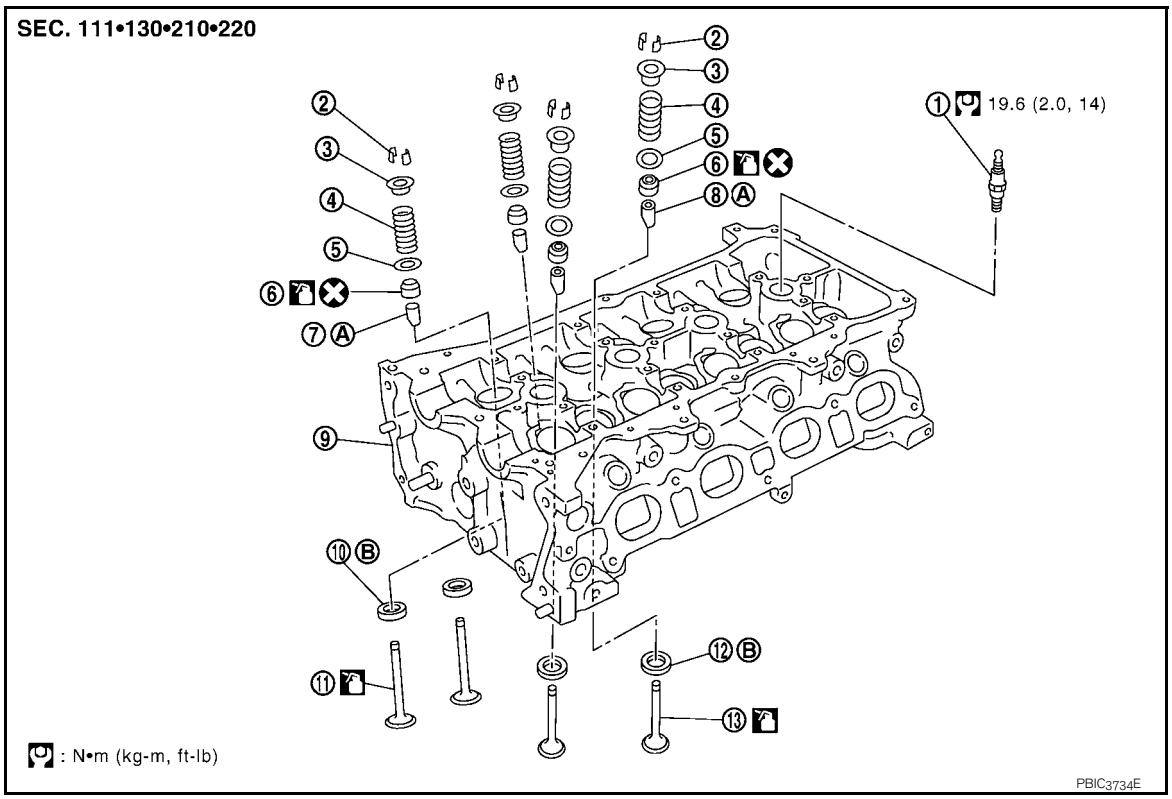

cardiagn.com

1. Spark plug	2. Valve collet	3. Valve spring retainer
4. Valve spring	5. Valve spring seat	6. Valve oil seal
7. Valve guide (EXH)	8. Valve guide (INT)	9. Cylinder head
10. Valve seat (EXH)	11. Valve (EXH)	12. Valve seat (INT)
13. Valve (INT)		
A. Refer to EM-76	B. Refer to EM-76	

Refer to GI-4, "Components" for symbols in the figure.

Removal and Installation

INFOID:0000000000894029

REMOVAL

1. Release fuel pressure. Refer to EC-357, "Inspection".
2. Drain engine coolant and engine oil. Refer to CO-9, "Draining" and LU-7, "Draining".
   CAUTION:
   - **Perform this step when the engine is cold.**
   - **Never spill engine coolant and engine oil on drive belt.**
3. Remove the following components and related parts.
   - Front fender protector (RH): Refer to EXT-21, "Exploded View".
   - Alternator: Refer to CHG-25, "HR16DE MODELS : Exploded View".
   - Exhaust front tube: Refer to EX-5, "Exploded View".
   - Exhaust manifold: Refer to EM-32, "Exploded View".
   - Intake manifold: Refer to EM-29, "Exploded View".
   - Fuel tube and fuel injector: Refer to EM-35, "Exploded View".
   - Water outlet: Refer to CO-21, "Exploded View".
   - Drive belt: Refer to EM-16, "Removal and Installation".
   - Front cover: Refer to EM-46, "Exploded View".
   - Camshaft: Refer to EM-55, "Exploded View".
4. Remove cylinder head loosening bolts in reverse order as shown in the figure with cylinder head wrench (commercial service tool).

   A : EXH side
   B : INT side
   ⇦ : Engine front

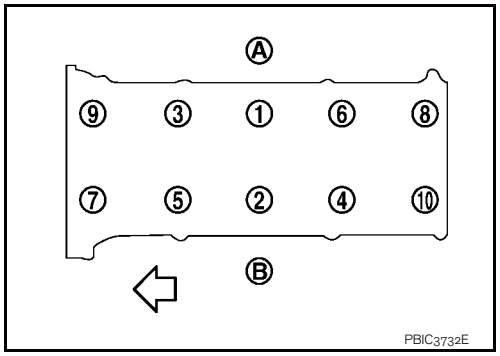

5. Remove cylinder head gasket.

INSTALLATION

1. Install new cylinder head gasket.
2. Tighten cylinder head bolts in numerical order as shown in the figure with the following procedure to install cylinder head.

   A : EXH side
   B : INT side
   ⇦ : Engine front

   CAUTION:
   If cylinder head bolts are re-used, check their outer diameters before installation. Refer to “Cylinder Head Bolts Outer Diameter”.

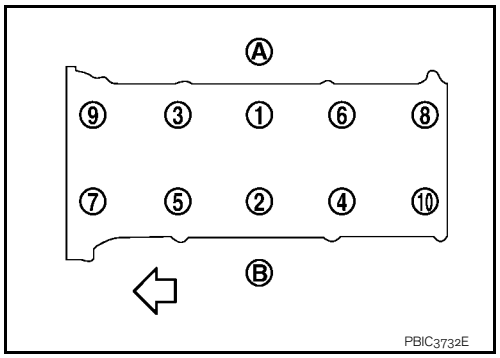

a. Apply new engine oil to threads and seating surfaces of mounting bolts.
b. Tighten all bolts.

cardiagn.com

: 66.7 N·m (6.8 kg-m, 49 ft-lb)

c. Completely loosen.

: 0 N·m (0 kg-m, 0 ft-lb)

CAUTION:
In this step, loosen bolts in reverse order of that indicated in the figure.

d. Tighten all bolts.

: 40.0 N·m (4.1 kg-m, 30 ft-lb)

e. Turn all bolts 75 degrees clockwise (angle tightening).
CAUTION:
Check and confirm the tightening angle by using the angle wrench [SST: KV10112100] (A) or protractor. Avoid judgment by visual inspection without the tool.

f. Turn all bolts 75 degrees clockwise again (angle tightening).

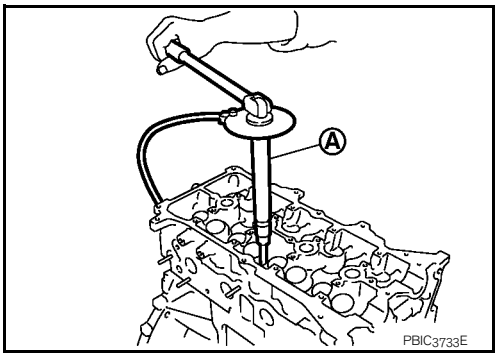

3. Install in the reverse order of removal, for the rest of parts.

Disassembly and Assembly

INFOID:0000000000894030

DISASSEMBLY

1. Remove spark plug with a spark plug wrench (commercial service tool).
2. Remove valve lifter.
   - Identify installation positions, and store them without mixing them up.
3. Remove valve collet.
   - Compress valve spring with the valve spring compressor, the attachment and the adapter [SST: KV10116200] (A). Remove valve collet with a magnet hand (B).

   CAUTION:
   Be careful not to damage valve lifter holes.

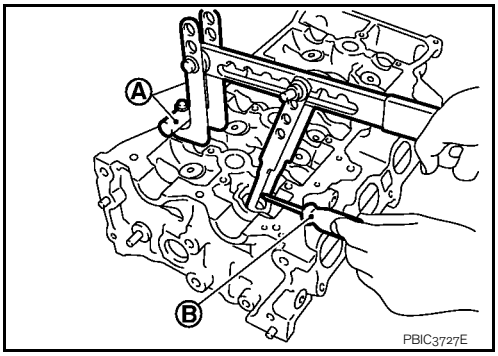

4. Remove valve spring retainer and valve spring.
5. Push valve stem to combustion chamber side, and remove valve.
   - Identify installation positions, and store them without mixing them up.

cardiagn.com

6. Remove valve oil seal with the valve oil seal puller [SST: KV10107902] (A).

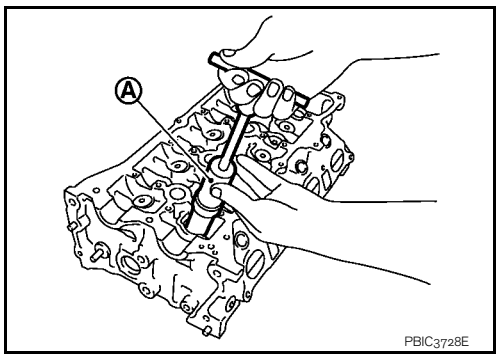

7. Remove valve spring seat.
8. Remove valve seat, if valve seat must be replaced.
   - Bore out old seat until it collapses. Boring should not continue beyond the bottom face of the seat recess in cylinder head. Set the machine depth stop to ensure this.

   CAUTION:
   Never bore excessively to prevent cylinder head from scratching.
9. Remove valve guide, if valve guide must be replaced.

a. To remove valve guide, heat cylinder head to 110 to 130°C (230 to 266°F) by soaking in heated oil (A).

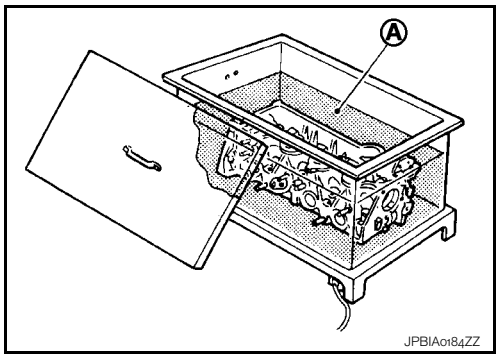

b. Drive out valve guide with a press [under a 20 kN (2 ton, 2.2 US ton, 2.0 Imp ton) pressure] or a hammer and the valve guide drift (commercial service tool).

   WARNING:
   Cylinder head contains heat. Wear protective equipment to avoid getting burned.

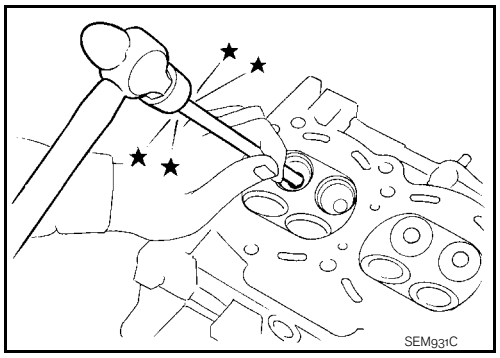

ASSEMBLY

1. When valve guide is removed, install it.

   CAUTION:
   Replace with oversize [0.2 mm (0.008 in)] valve guide.

a. Using the valve guide reamer (commercial service tool) (A), ream cylinder head valve guide hole.

For service parts: Oversized [0.2 mm (0.008 in)]

Refer to EM-118, "Cylinder Head".

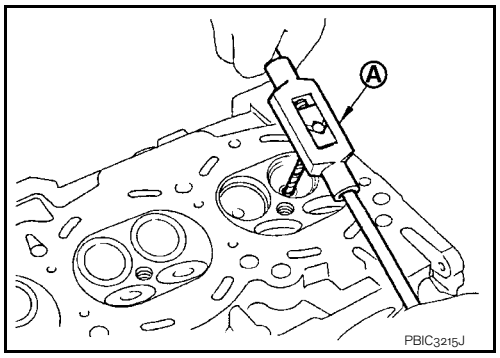

cardiagn.com

b. Heat cylinder head to 110 to 130°C (230 to 266°F) by soaking in heated oil (A).

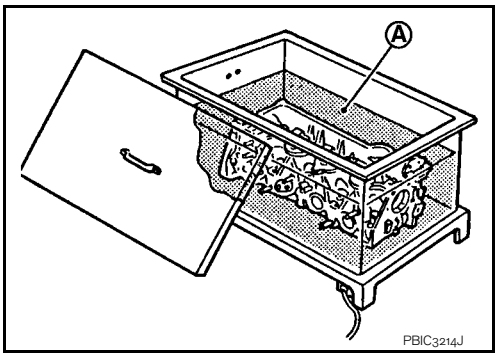

c. Using the valve guide drift (commercial service tool), press valve guide (1) from camshaft side to the dimensions as in the figure.

Projection "H": Refer to EM-118, "Cylinder Head".

WARNING:
Cylinder head (2) contains heat. Wear protective equipment to avoid getting burned.

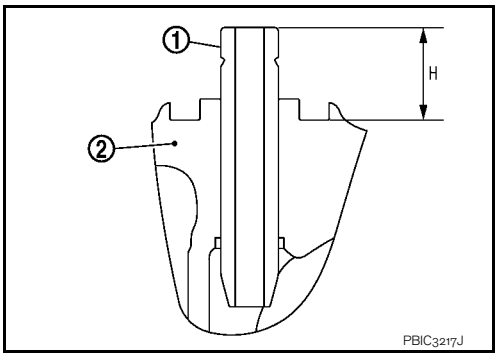

d. Using the valve guide reamer (commercial service tool) (A), apply reamer finish to valve guide.

Standard: Refer to EM-118, "Cylinder Head".

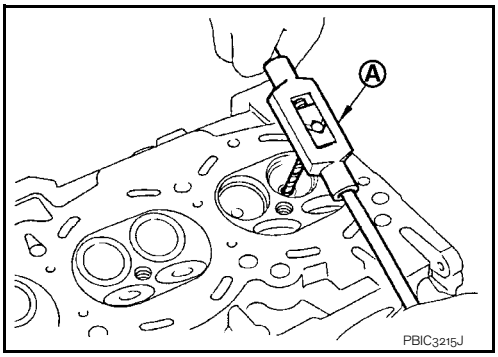

2. When valve seat is removed, install it.
CAUTION:
Replace with oversize [0.5 mm (0.020 in)] valve seat.

a. Ream cylinder head recess diameter (a) for service valve seat.

For service parts: Oversize [0.5 mm (0.020 in)]

Refer to EM-118, "Cylinder Head".

- Be sure to ream in circles concentric to valve guide center. This will enable valve to fit correctly.

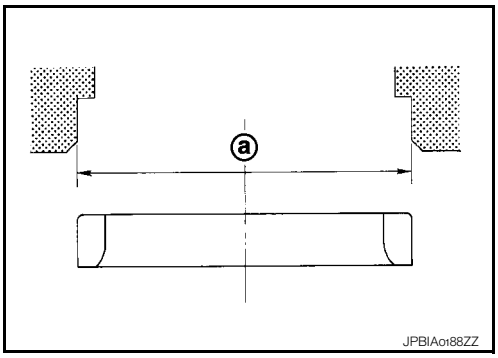

cardiagn.com

b. Heat cylinder head to 110 to 130°C (230 to 266°F) by soaking in heated oil (A).

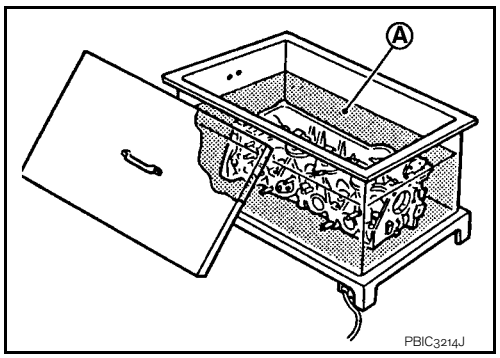

c. Provide valve seats cooled well with dry ice. Force fit valve seat into cylinder head.

WARNING:
Cylinder head contains heat. Wear protective equipment to avoid getting burned.
CAUTION:
Avoid directly touching cold valve seats.

d. Using the valve seat cutter set (commercial service tool) or valve seat grinder, finish seat to the specified dimensions. Refer to EM-118, "Cylinder Head".

CAUTION:
When using the valve seat cutter, firmly grip cutter handle with both hands. Then, press on the contacting surface all around the circumference to cut in a single drive. Improper pressure on with cutter or cutting many different times may result in stage valve seat.

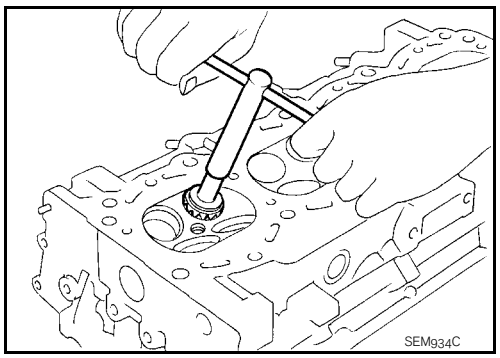

e. Using compound, grind to adjust valve fitting.

f. Check again for normal contact. Refer to EM-80, "Inspection".

3. Install valve oil seal.
   - Install with the valve oil seal drift [SST: KV10115600] (A) to match dimension in the figure.

Height "H" : 13.2 - 13.8 mm (0.520 - 0.543 in)

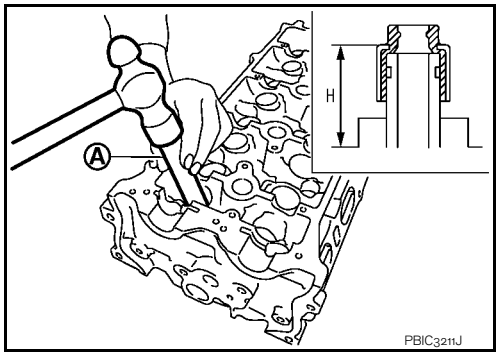

4. Install valve spring seat.
5. Install valve.
   - Install larger diameter to intake side.
6. Install valve spring.
   NOTE:
   It can be installed in either direction.
7. Install valve spring retainer.
8. Install valve collet.

cardiagn.com

- Compress valve spring with the valve spring compressor, the attachment and the adapter [SST: KV10116200] (A). Install valve collet with a magnet hand (B).
  CAUTION:
  Be careful not to damage valve lifter holes.
- Tap valve stem edge lightly with a plastic hammer after installation to check its installed condition.

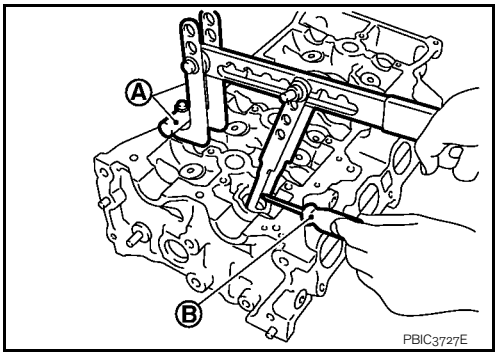

9. Install valve lifter.
10. Install spark plug with a spark plug wrench (commercial service tool).

Inspection

INFOID:0000000000943692

INSPECTION AFTER REMOVAL

Cylinder Head Bolts Outer Diameter

- Cylinder head bolts are tightened by plastic zone tightening method. Whenever the size difference between “d1” and “d2” exceeds the limit, replace them with a new one.

  Limit (“d1”–“d2”): 0.15 mm (0.0059 in)

- If reduction of outer diameter appears in a position other than “d2”, use it as “d2” point.

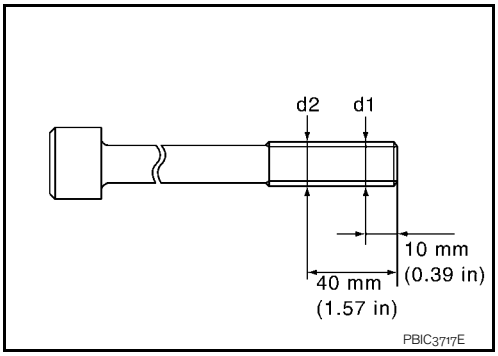

Cylinder Head Distortion

NOTE:
When performing this inspection, cylinder block distortion should be also checking. Refer to EM-120, "Cylinder Block".

1. Wipe off engine oil and remove water scale (like deposit), gasket, sealant, carbon, etc. with a scraper.
   CAUTION:
   Never allow gasket debris to enter passages for engine oil or engine coolant.
2. At each of several locations on bottom surface of cylinder head, measure the distortion in six directions.

   A : Straightedge
   B : Feeler gauge

   Limit : Refer to EM-118, "Cylinder Head".

   - If it exceeds the limit, replace cylinder head.

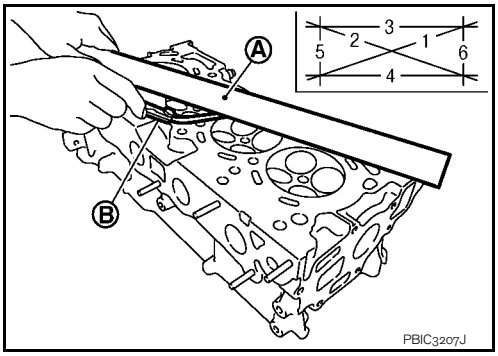

INSPECTION AFTER DISASSEMBLY

Valve Dimensions

- Check the dimensions of each valve. For the dimensions, refer to EM-118, "Cylinder Head".
- If dimensions are out of the standard, replace valve and check valve seat contact. Refer to “VALVE SEAT CONTACT”.

Valve Guide Clearance

Valve Stem Diameter

cardiagn.com

- Measure the diameter of valve stem with micrometer (A).

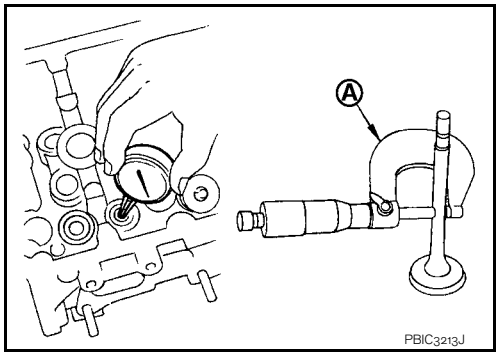

Standard : Refer to EM-118, "Cylinder Head".

Valve Guide Inner Diameter
- Measure the inner diameter of valve guide with bore gauge.

Standard : Refer to EM-118, "Cylinder Head".

Valve Guide Clearance
- (Valve guide clearance) = (Valve guide inner diameter) – (Valve stem diameter)

Standard and Limit : Refer to EM-118, "Cylinder Head".

- If the calculated value exceeds the limit, replace valve and/or valve guide. When valve guide must be replaced, refer to “VALVE GUIDE REPLACEMENT”.

Valve Seat Contact
- After confirming that the dimensions of valve guides and valves are within the specifications, perform this procedure.
- Apply prussian blue (or white lead) onto contacting surface of valve seat to check the condition of the valve contact on the surface.
- Check if the contact area band is continuous all around the circumference.
- If not, grind to adjust valve fitting and check again. If the contacting surface still has “NG” conditions even after the re-check, replace valve seat. Refer to EM-76, "Disassembly and Assembly".

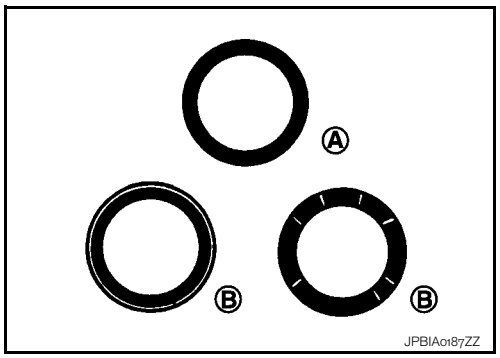

A : OK
B : NG

Valve Spring Squareness
- Set a try square (A) along the side of valve spring and rotate spring. Measure the maximum clearance between the top of spring and try square.

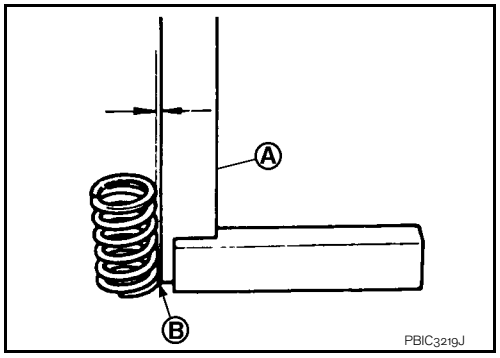

B : Contact

Limit : Refer to EM-118, "Cylinder Head".

- If it exceeds the limit, replace valve spring.

Valve Spring Dimensions and Valve Spring Pressure Load
- Check the valve spring pressure at specified spring height.

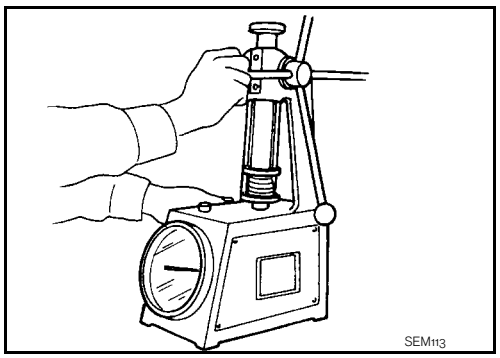

Standard : Refer to EM-118, "Cylinder Head".

- If the installation load or load with valve open is out of the standard, replace valve spring.

INSPECTION AFTER INSTALLATION

Inspection for Leaks
- Before starting engine, check oil/fluid levels including engine coolant and engine oil. If less than required quantity, fill to the specified level. Refer to MA-21, "Fluids and Lubricants".

cardiagn.com

- Use procedure below to check for fuel leakage.
  - Turn ignition switch “ON” (with engine stopped). With fuel pressure applied to fuel piping, check for fuel leakage at connection points.
  - Start engine. With engine speed increased, check again for fuel leakage at connection points.
- Run engine to check for unusual noise and vibration.
- Warm up engine thoroughly to make sure there is no leakage of fuel, exhaust gases, or any oil/fluids including engine oil and engine coolant.
- Bleed air from lines and hoses of applicable lines, such as in cooling system.
- After cooling down engine, again check oil/fluid levels including engine oil and engine coolant. Refill to the specified level, if necessary.

Summary of the inspection items:

Items	Before starting engine	Engine running	After engine stopped
Engine coolant	Level	Leakage	Level
Engine oil	Level	Leakage	Level
Other oils and fluid*	Level	Leakage	Level
Fuel	Leakage	Leakage	Leakage
Exhaust gases	—	Leakage	—

*: Transmission/transaxle/CVT fluid, power steering fluid, brake fluid, etc.

cardiagn.com

REMOVAL AND INSTALLATION

ENGINE ASSEMBLY

Exploded View

INFOID:0000000000893871

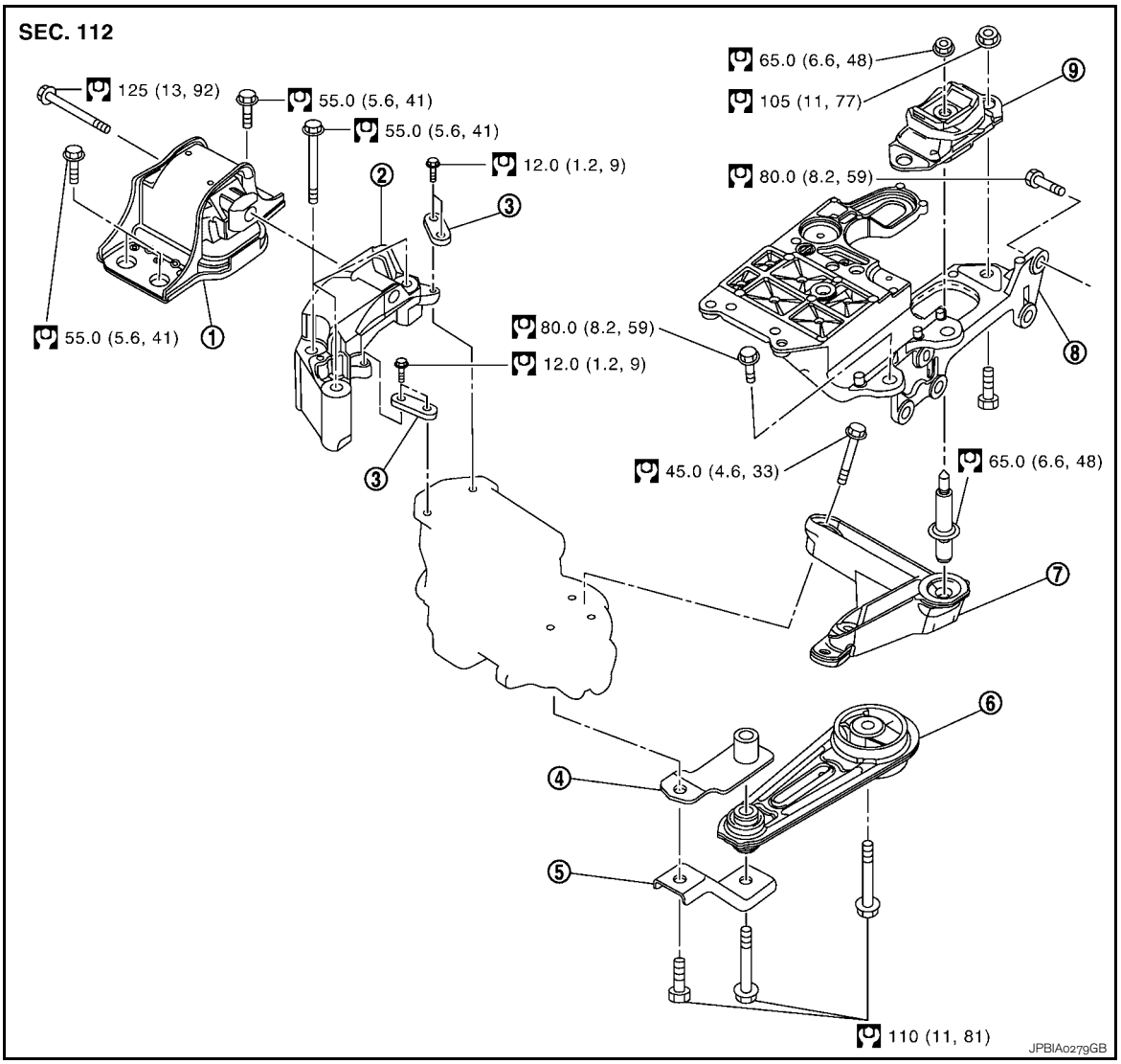

1. Engine mounting insulator (RH)
2. Engine mounting bracket (RH)
3. Engine mounting stay
4. Rear engine mounting bracket
5. Rear engine mounting bracket
6. Rear torque rod
7. Engine mounting bracket (LH)
8. Engine mounting bracket (LH)
9. Engine mounting insulator (LH)

Refer to GI-4, "Components"for symbols in the figure.

Removal and Installation

INFOID:0000000000894026

WARNING:
- **Situate the vehicle on a flat and solid surface.**
- **Place chocks at front and back of rear wheels.**
- **Attach proper slingers and bolts described in PARTS CATALOG if engine slingers are not equipped.**

CAUTION:
- **Always be careful to work safely, avoid forceful or uninstructed operations.**
- **Never start working until exhaust system and coolant are cool enough.**
- **If items or work required are not covered by the engine section, refer to the applicable sections.**
- **Always use the support point specified for lifting.**

cardiagn.com

- **Use either 2-pole lift type or separate type lift as best you can. If board-on type is used for unavoidable reasons, support at the rear axle jacking point with a transmission jack or similar tool before starting work, in preparation for the backward shift of center of gravity.**
- **For supporting points for lifting and jacking point at rear axle, refer to GI-33, "Garage Jack and Safety Stand and 2-Pole Lift".**

REMOVAL

Outline

Remove the engine and the transaxle assembly from the vehicle downward. Separate the engine and the transaxle.

Preparation

1. Release fuel pressure. Refer to EC-357, "Inspection".
2. Drain engine coolant from radiator. Refer to CO-9, "Draining".
   CAUTION:
   - **Perform this step when the engine is cold.**
   - **Never spill engine coolant on drive belt.**
3. Remove the following parts.
   - Engine undercover
   - Front fender protector (RH and LH): Refer to EXT-21, "Exploded View".
   - Front road wheels and tires: Refer toWT-4, "Road Wheel".
   - Battery and battery tray: Refer to PG-118, "Exploded View".
   - Drive belt: Refer to EM-16, "Removal and Installation".
   - Air duct and air cleaner case assembly: Refer to EM-27, "Exploded View".
   - Radiator hose (upper and lower): Refer to CO-13, "Exploded View".
   - Exhaust front tube: Refer to EX-5, "Exploded View".

Engine Room LH

1. Disconnect all connections of engine harness around the engine mounting insulator (LH), and then temporarily secure the engine harness into the engine side.
   CAUTION:
   Protect connectors using a resin bag against foreign materials.
2. Disconnect fuel feed hose at engine side. Refer to EM-35, "Exploded View".
3. Disconnect heater hoses, and install plugs them to prevent engine coolant from draining. Refer to CO-21, "Exploded View".
4. Disconnect control linkage from transaxle. Refer to TM-19, "Exploded View".
5. Remove ground cable at transaxle side.

Engine Room RH

1. Remove ground cable between front cover and vehicle.
2. Alternator and alternator bracket; Refer to CHG-25, "HR16DE MODELS : Exploded View".
3. Disconnect reservoir tank hose. Refer to CO-13, "Exploded View".
4. Remove A/C compressor with piping connected from the engine. Temporarily secure it on the vehicle side with a rope to avoid putting load on it. (with A/C models) Refer to HA-39, "Exploded View".

Vehicle Underbody

1. Remove front wheel sensor (LH and RH) for ABS from steering knuckle. Refer to BRC-67, "FRONT WHEEL SENSOR : Exploded View".
2. Remove brake caliper assembly with piping connected from steering knuckle. Temporarily secure it on the vehicle side with a rope to avoid load on it. Refer to BR-37, "BRAKE CALIPER ASSEMBLY : Exploded View".
3. Remove stabilizer connecting rod. Refer to FSU-16, "Exploded View".
4. Remove steering knuckle mounting nuts and bolts. Refer to FSU-16, "Exploded View".
5. Disconnect steering outer socket. Refer to ST-13, "Exploded View".
6. Remove drive shafts (LH and RH) and center bearing cover bracket. Refer to FAX-15, "HR16DE MODELS : Exploded View".
7. Disconnect steering lower joint at power steering gear assembly side, and release steering lower shaft. Refer to ST-10, "Exploded View".

cardiagn.com

8. Remove rear torque rod.
9. Remove front suspension member. Refer to FSU-16, "Exploded View".
10. Preparation for the separation work of transaxle is as follows:
    - Remove transaxle joint bolts which pierce at oil pan (upper) lower rear side. Refer to EM-40, "Exploded View".

Removal

1. Use a manual lift table caddy (commercial service tool) or equivalently rigid tool such as a transmission jack. Securely support bottom of the engine and the transaxle assembly.
   CAUTION:
   Put a piece of wood or something similar as the supporting surface, secure a completely stable condition.

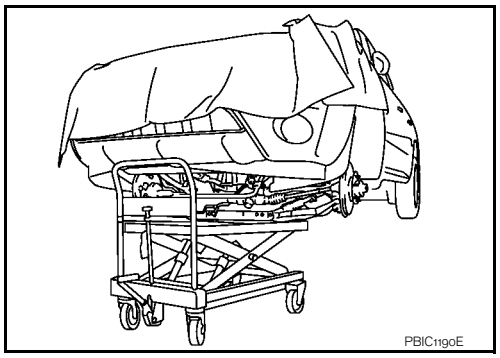

2. Remove engine mounting insulator (RH) (1), engine mounting bracket (RH) (2) and engine mounting stay (3).

   4 : Engine mounting insulator (LH)

3. Remove engine mounting through bolt-securing nut (A).

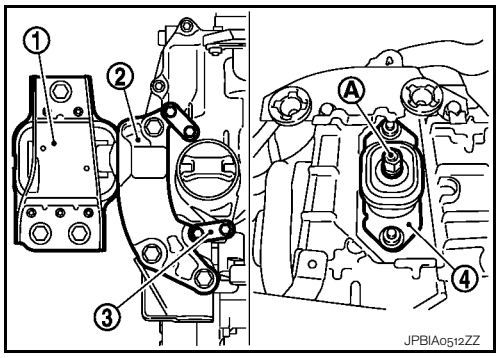

4. Carefully lower jack, or raise lift to remove the engine and the transaxle assembly.
   CAUTION:
   - **Make sure that no part interferes with the vehicle side.**
   - **Before and during this lifting, always check if any harnesses are left connected.**
   - **During the removal, always be careful to prevent the vehicle from falling off the lift due to changes in the center of gravity.**
   - **If necessary, support the vehicle by setting jack or suitable tool at the rear.**

Separation

1. Install engine slinger to cylinder head front left side (A) and rear right side (B).

   ⇦ : Engine front

   Slinger bolts

   : 25.5 N·m (2.6 kg-m, 19 ft-lb)

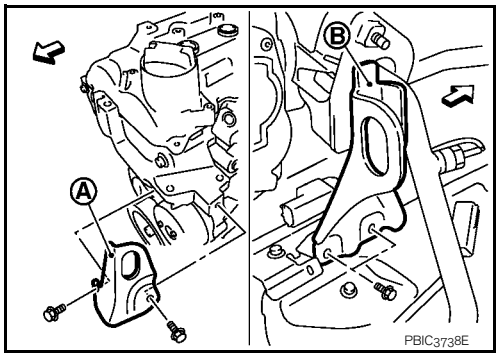

2. Remove starter motor. Refer to STR-20, "HR16DE MODELS : Exploded View".
3. Lift with a hoist and separate the engine from the transaxle assembly. Refer to TM-23, "Exploded View".

INSTALLATION

Note the following, and install in the reverse order of removal.

- Do not allow engine oil to get on engine mounting insulator. Be careful not to damage engine mounting insulator.
- Make sure that each mounting insulator is seated properly, and tighten mounting nuts and bolts.

cardiagn.com

- Tighten engine mounting insulator (RH) bolts in the numerical order shown in the figure.

⇦ : Vehicle front

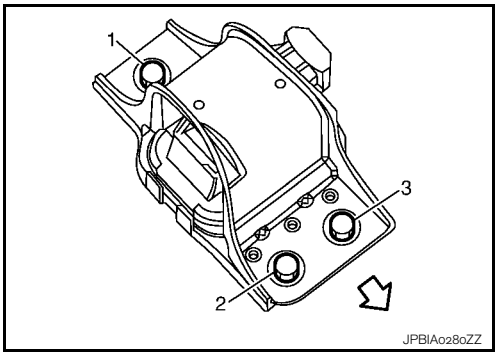

Inspection

INFOID:0000000000893873

INSPECTION AFTER INSTALLATION

Inspection for Leaks

- Before starting engine, check oil/fluid levels including engine coolant and engine oil. If less than required quantity, fill to the specified level. Refer to MA-21, "Fluids and Lubricants".
- Use procedure below to check for fuel leakage.
  - Turn ignition switch “ON” (with engine stopped). With fuel pressure applied to fuel piping, check for fuel leakage at connection points.
  - Start engine. With engine speed increased, check again for fuel leakage at connection points.
- Run engine to check for unusual noise and vibration.
- Warm up engine thoroughly to make sure there is no leakage of fuel, exhaust gases, or any oil/fluids including engine oil and engine coolant.
- Bleed air from lines and hoses of applicable lines, such as in cooling system.
- After cooling down engine, again check oil/fluid levels including engine oil and engine coolant. Refill to the specified level, if necessary.

Summary of the inspection items:

Items	Before starting engine	Engine running	After engine stopped
Engine coolant	Level	Leakage	Level
Engine oil	Level	Leakage	Level
Other oils and fluid*	Level	Leakage	Level
Fuel	Leakage	Leakage	Leakage
Exhaust gases	—	Leakage	—

*: Transmission/transaxle/CVT fluid, power steering fluid, brake fluid, etc.

cardiagn.com

DISASSEMBLY AND ASSEMBLY

ENGINE STAND SETTING

Setting

INFOID:0000000000893874

NOTE:
Explained here is how to disassemble with engine stand supporting transmission surface. When using different type of engine stand, note with difference in steps and etc.

1. Remove the engine and the transaxle assembly from the vehicle, and separate the transaxle from the engine. Refer to EM-83, "Exploded View".
2. Remove clutch cover and clutch disc. Refer to CL-16, "HR16DE, MR20DE : Exploded View".
3. Remove flywheel.
   - Secure flywheel with a stopper plate [SST: KV11105210], and remove mounting bolts.

   CAUTION:
   - **Never disassemble flywheel.**
   - **Never place flywheel with signal plate facing down.**
   - **When handling signal plate, take care not to damage or scratch it.**
   - **Handle signal plate in a manner that prevents it from becoming magnetized.**

4. Lift the engine with a hoist to install it onto widely use engine stand.

   CAUTION:
   - **Use the engine stand that has a load capacity [approximately 135 kg (298 lb) or more] large enough for supporting the engine weight.**
   - If the load capacity of stand is not adequate, remove the following parts beforehand to reduce the potential risk of overturning stand.
   - Intake manifold: Refer to EM-29, "Exploded View".
   - Exhaust manifold: Refer to EM-32, "Exploded View".
   - Rocker cover: Refer to EM-43, "Exploded View".

   NOTE:
   The figure shows an example of widely use engine stand that can support mating surface of transaxle with flywheel removed.

   CAUTION:
   Before removing the hanging chains, make sure the engine stand is stable and there is no risk of overturning.

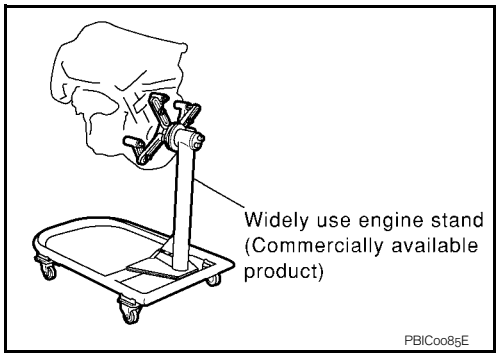

5. Drain engine oil. Refer to LU-7, "Draining".
6. Drain engine coolant by removing water drain plug (1) from inside of the engine.

   ⇦ : Engine front

   Use Genuine Liquid Gasket or equivalent.

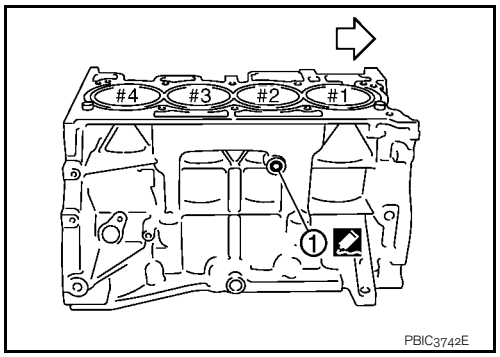

cardiagn.com

ENGINE UNIT

Disassembly

INFOID:0000000000893875

1. Remove intake manifold. Refer to EM-29, "Exploded View".
2. Remove exhaust manifold. Refer to EM-32, "Exploded View".
3. Remove oil pan (lower). Refer to EM-40, "Exploded View".
4. Remove ignition coil, spark plug and rocker cover. Refer to EM-43, "Exploded View".
5. Remove fuel injector and fuel tube. Refer to EM-35, "Exploded View".
6. Remove timing chain. Refer to EM-46, "Exploded View".
7. Remove camshaft. Refer to EM-55, "Exploded View".
8. Remove cylinder head. Refer to EM-74, "Exploded View".

Assembly

INFOID:0000000000893876

Assembly is the reverse order of disassembly.

cardiagn.com

OIL PAN (UPPER)

Exploded View

INFOID:0000000000894028

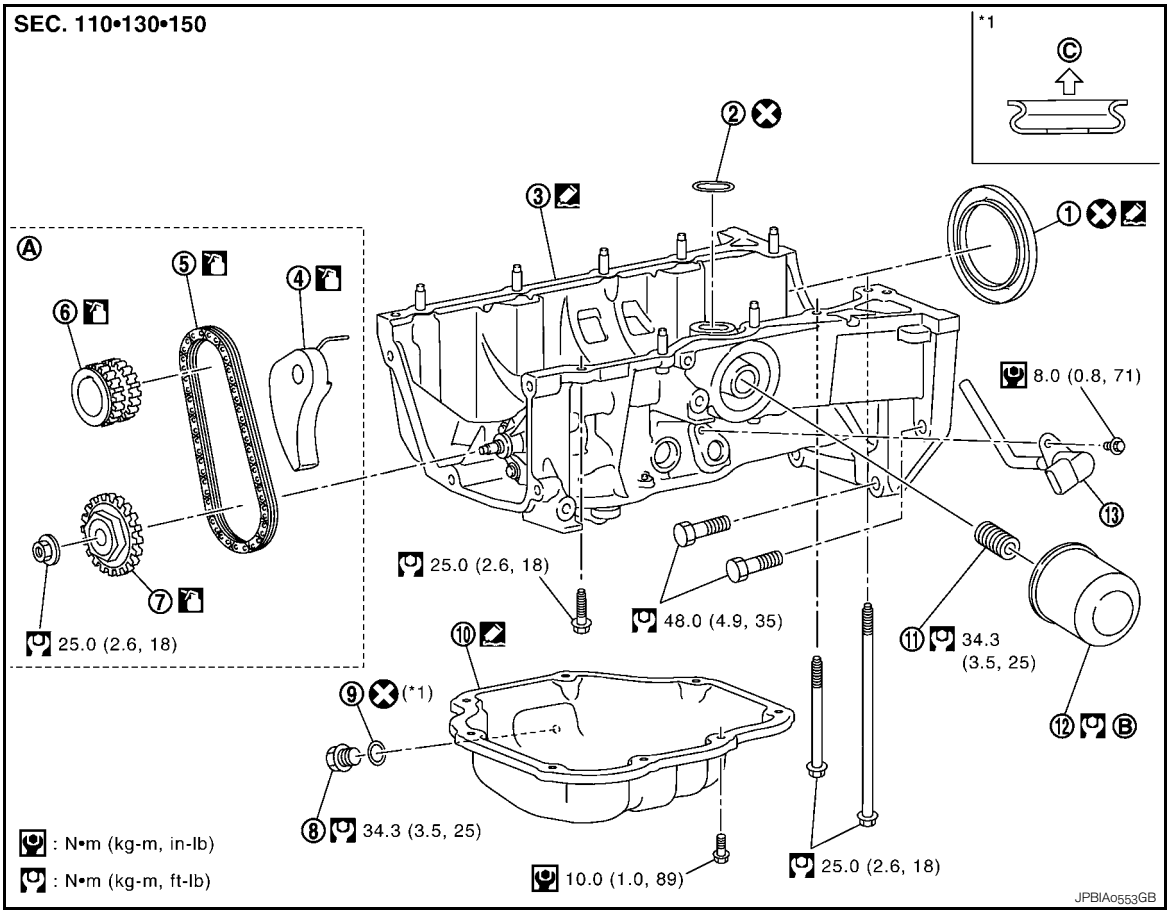

1.	Rear oil seal	2.	O-ring	3.	Oil pan (upper)
4.	Chain tensioner	5.	Oil pump drive chain	6.	Crankshaft sprocket
7.	Oil pump sprocket	8.	Oil pan drain plug	9.	Washer
10.	Oil pan (lower)	11.	Oil filter stud bolt	12.	Oil filter
13.	Oil level sensor				
A.	Refer to EM-46	B.	Refer to LU-9	C.	Oil pan side

Refer to GI-4, "Components" for symbols in the figure.

Removal and Installation

INFOID:0000000000894027

NOTE:
The oil strainer and oil pump are included in the oil pan (upper). Individual disassembly is prohibited.

REMOVAL

1. Remove the oil pan (lower). Refer to EM-40, "Exploded View".
2. Remove front cover and timing chain. Refer to EM-46, "Exploded View".
3. Remove oil pump sprocket and crankshaft sprocket together with oil pump drive chain. Refer to EM-46, "Exploded View".
4. Remove oil pan (upper) with the following procedure.

cardiagn.com

a. Loosen oil pan (upper) mounting bolts in the reverse of the order shown in the figure.

⇦ : Engine front

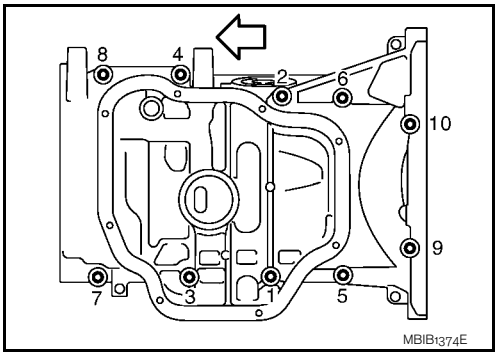

b. Insert a flat-bladed offset screwdriver into the arrow (⬅) in the figure and open up a crack between the oil pan (upper) cylinder block.

⇦ : Engine front

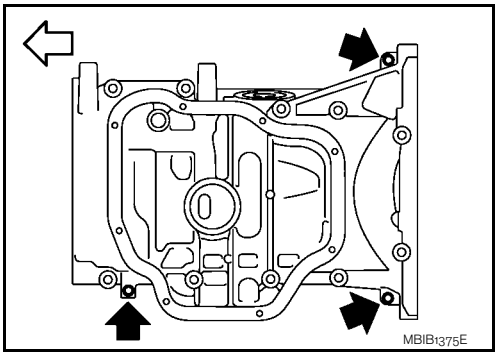

c. Insert the seal cutter [SST: KV10111100] between remove the oil pan (upper) and cylinder block. Slide seal cutter by tapping on the side of tool with a hammer.

CAUTION:
- **Be careful not to damage the mating surface.**
- **A more adhesive liquid gasket is applied compared to previous types when shipped, so it should not be forced off using a screwdriver, etc. outside the indicated location.**
- **Never remove oil pump and oil strainer from oil pan (upper).**

5. Remove oil level sensor, if necessary.
6. Remove rear oil seal from crankshaft.

INSTALLATION

1. Install the oil pan (upper) in the following procedure.

a. Use scraper to remove old liquid gasket from mating surfaces.
- Also remove the old liquid gasket from mating surface of cylinder block.
- Remove old liquid gasket from the bolt holes and threads.

CAUTION:
Never scratch or damage the mating surfaces when cleaning off old liquid gasket.

b. Install O-ring to the cylinder block.

cardiagn.com

c. Apply a continuous bead of liquid gasket (C) with the tube presser (commercial service tool) to areas shown in the figure.
Use Genuine Liquid Gasket or equivalent.

A : 2 mm (0.08 in) protruded to outside
B : 2 mm (0.08 in) protruded to rear oil seal mounting side
⇦ : Engine front
⬅ : Oil pan out side

CAUTION:
Attaching should be done within 5 minutes after coating.

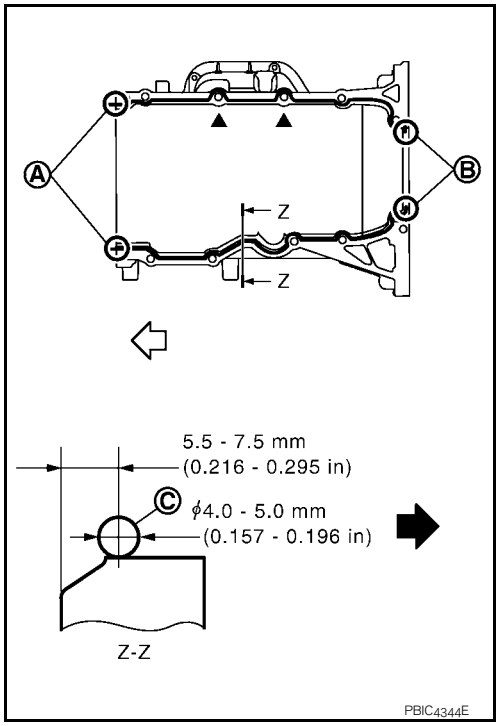

d. Tighten bolts in the numerical order shown in the figure.

⇦ : Engine front

CAUTION:
Install avoiding misalignment of both oil pan gasket and O-ring.
- The bolts are different according to the installation position. Refer to the numbers shown in the figure.

M8 × 179 mm (7.05 in)	**: No. 9, 10**
M8 × 25 mm (0.98 in)	**: No. 4, 7, 8**
M8 × 90 mm (3.54 in)	**: No. 1, 2, 3, 5, 6**

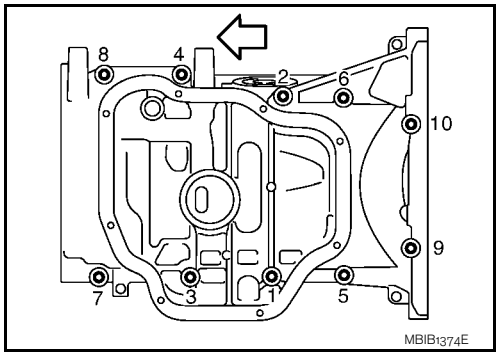

2. Install rear oil seal.
CAUTION:
- **The installation of rear oil seal should be completed within 5 minutes after installing oil pan (upper).**
- **Never touch oil seal lip.**

a. Wipe off any liquid gasket protruding to the rear oil seal mounting part of oil pan (upper) and cylinder block using a spatula.

b. Apply the liquid gasket lightly to entire outside area of new rear oil seal.
Use Genuine Liquid Gasket or equivalent.

c. Press-fit the rear oil seal using a drift with outer diameter 113 mm (4.45 in) and inner diameter 90 mm (3.54 in) (commercial service tool) (A).

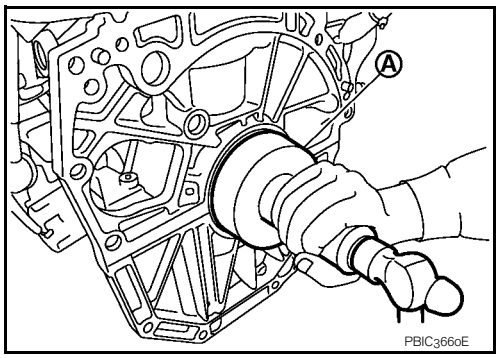

cardiagn.com

- Press-fit to the dimensions specified in the figure.

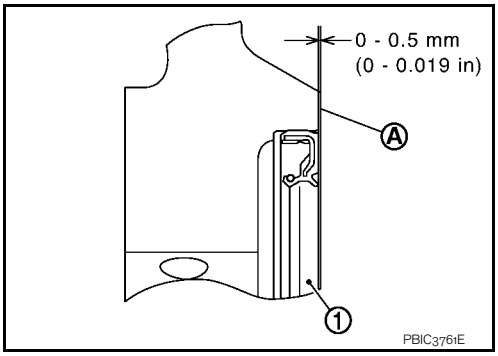

1. Rear oil seal

A. Rear end surface of cylinder block

CAUTION:
- **Never touch the grease applied to the oil seal lip.**
- **Be careful not to damage the rear oil seal mounting part of oil pan (upper) and cylinder block or the crankshaft.**
- **Press-fit straight make sure that oil seal does not curl or tilt.**

d. After press-fitting the rear oil seal, completely wipe off any liquid gasket protruding to rear end surface side.

3. Install crankshaft sprocket, oil pump sprocket, oil pump drive chain, and chain tensioner. Refer to EM-46, "Removal and Installation".
4. Install timing chain and related parts. Refer to EM-46, "Removal and Installation".
5. Install front cover and related parts. Refer to EM-46, "Removal and Installation".
6. Install in the reverse order of removal, for the rest of parts.
   CAUTION:
   Pour engine oil at least 30 minutes after oil pan is installed.

Inspection

INFOID:0000000000893882

INSPECTION AFTER INSTALLATION

1. Check the engine oil level and adjust engine oil. Refer to LU-6, "Inspection".
2. Start engine, and check there is no leak of engine oil.
3. Stop engine and wait for 10 minutes.
4. Check the engine oil level again. Refer to LU-6, "Inspection".

cardiagn.com

CYLINDER BLOCK

Exploded View

INFOID:0000000000893890

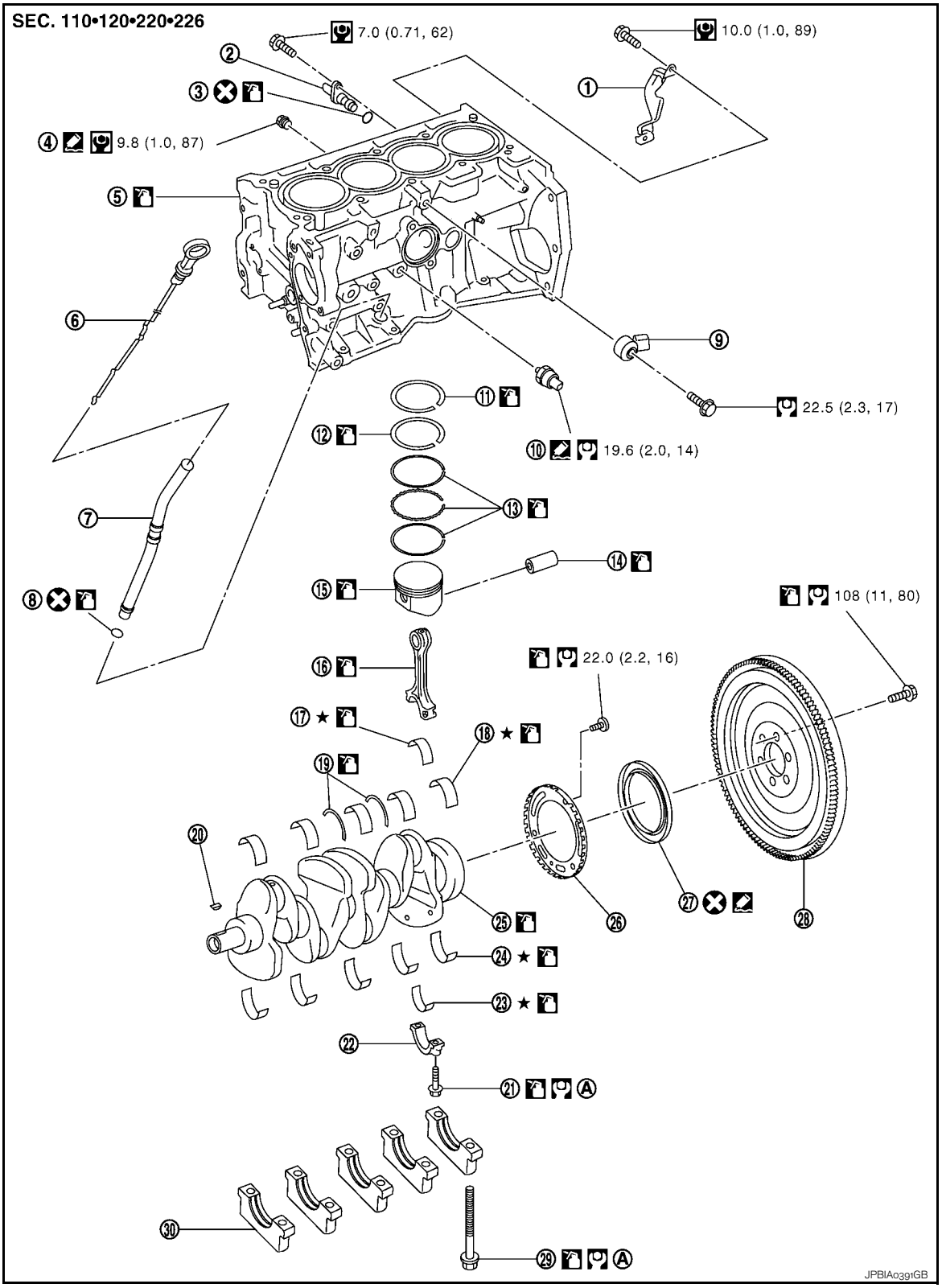

1. Crankshaft position sensor (POS) cover
2. Crankshaft position sensor (POS)
3. O-ring
4. Water drain plug
5. Cylinder block
6. Oil level gauge
7. Oil level gauge guide
8. O-ring
9. Knock sensor

cardiagn.com

10. Oil pressure switch
11. Top ring
12. Second ring
13. Oil ring
14. Piston pin
15. Piston
16. Connecting rod
17. Connecting rod bearing (upper)
18. Main bearing (upper)
19. Thrust bearing
20. Crankshaft key
21. Connecting rod cap bolt
22. Connecting rod cap
23. Connecting rod bearing (lower)
24. Main bearing (lower)
25. Crankshaft
26. Signal plate
27. Rear oil seal
28. Flywheel
29. Main bearing cap bolt
30. Main bearing cap

A. Refer to EM-94

Refer to GI-4, "Components" for symbols in the figure.

Disassembly and Assembly

INFOID:0000000000894031

DISASSEMBLY

1. Remove oil pan (upper). Refer to EM-89, "Removal and Installation".
2. Remove cylinder head. Refer to EM-75, "Removal and Installation".
3. Remove knock sensor.
   CAUTION:
   Carefully handle knock sensor avoiding shocks.
4. Remove crankshaft position sensor (POS) and cover.
   CAUTION:
   - **Avoid impacts such as a dropping.**
   - **Never disassemble.**
   - **Keep it away from metal particles.**
   - **Never place the sensor where it is exposed to magnetism.**
5. Remove piston and connecting rod assembly with the following procedure:
   - Before removing piston and connecting rod assembly, check the connecting rod side clearance. Refer to EM-101, "Inspection".

a. Position crankshaft pin corresponding to connecting rod to be removed onto the bottom dead center.

b. Remove connecting rod cap.

c. Using a hammer handle or similar tool, push piston and connecting rod assembly out to the cylinder head side.
   CAUTION:
   - **Be careful not to damage matching surface with connecting rod cap.**
   - **Be careful not to damage the cylinder wall and crankshaft pin, resulting from an interference of the connecting rod big end.**

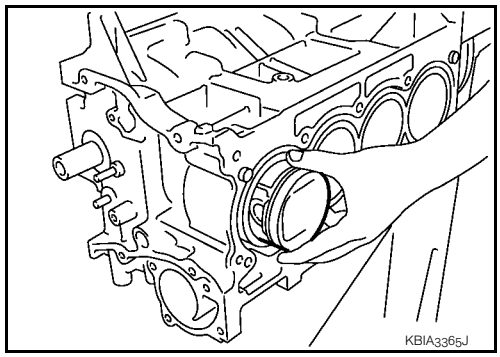

6. Remove connecting rod bearings.
   CAUTION:
   Identify installation positions, and store them without mixing up.
7. Remove piston rings form piston.
   - Before removing piston rings, check the piston ring side clearance. Refer to EM-101, "Inspection".

cardiagn.com

- Use a piston ring expander (commercial service tool) (A).

CAUTION:
- **When removing piston rings, be careful not to damage the piston.**
- **Be careful not to damage piston rings by expanding them excessively.**

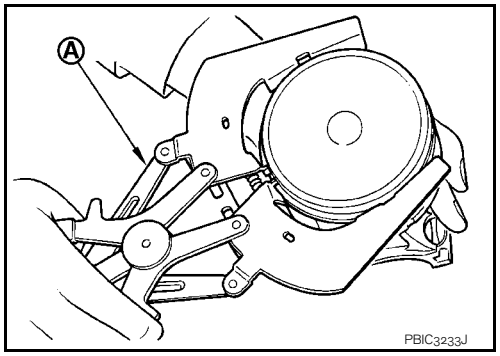

8. Remove piston from connecting rod.
   - Use a piston pin press stand (SST) and a press to remove the piston pin.

   A : Drift [KV10109730]
   B : Center cap [KV10110310]
   C : Press stand [ST13030020]

   CAUTION:
   Be careful not to damage the piston and connecting rod.
   NOTE:
   The joint between the connecting rod and the piston pin is a press fit.

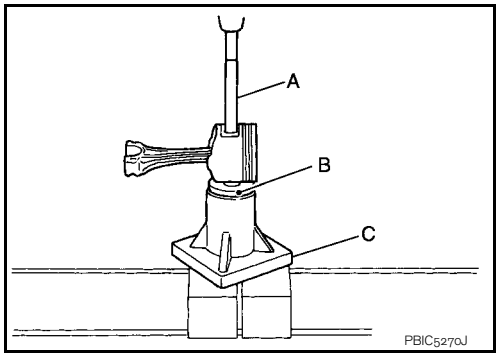

9. Remove the main bearing cap in the following procedure.
   - Measure crankshaft end play before loosening main bearing cap bolts. Refer to EM-101, "Inspection"

a. Loosen and remove bolts in several steps in reverse of the numerical order shown in the figure.

   ⇦ : Engine front

   - TORX socket (size: E14) can be used.

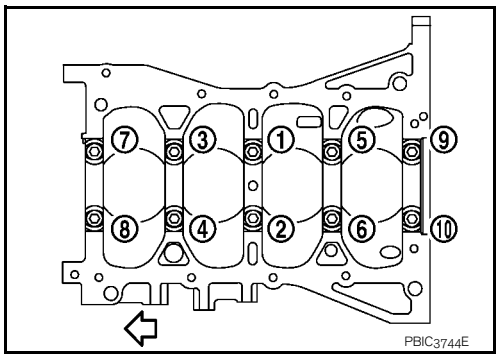

b. Remove the main bearing cap from the cylinder block while tapping lightly with a plastic hammer.

10. Remove crankshaft (2).

CAUTION:
- **Be careful not damage or deform signal plate (1) mounted on crankshaft.**
- **When setting crankshaft on a flat floor surface, use a block of wood to avoid interference between signal plate and the floor surface.**
- **Never remove signal plate unless it is necessary to do so.**

NOTE:
When removing or installing signal plate, use TORX socket (size T40).

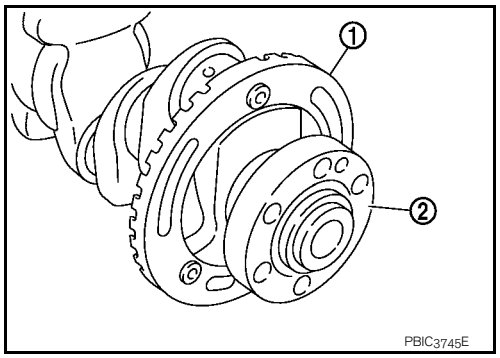

11. Pull rear oil seal out from rear end of crankshaft.
12. Remove main bearing (upper and lower) and thrust bearings from cylinder block and main bearing cap.

CAUTION:
Identify installation positions, and store them without mixing up.

ASSEMBLY

cardiagn.com

1. Fully air-blow engine coolant and engine oil passages in cylinder block, cylinder bore and crankcase to remove any foreign material.
   CAUTION:
   Use a goggles to protect eyes.
2. Install water drain plug (1) to cylinder block as shown in the figure.

   ⇦ : Engine front

   Use Genuine Liquid Gasket or equivalent.

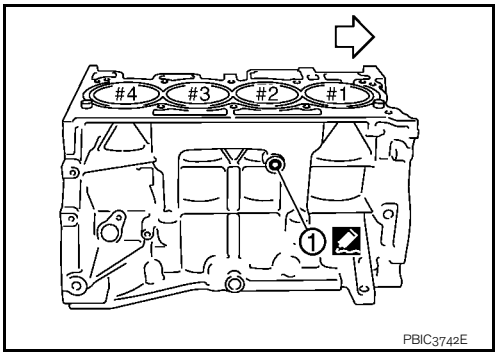

3. Install main bearings and thrust bearings with the following procedure:

a. Remove dust, dirt, and engine oil on the bearing mating surfaces of cylinder block.

b. Install thrust bearings to the both sides of the No. 3 journal housing (B) on cylinder block.

   ⇦ : Engine front

   - Install thrust bearings with the oil groove (A) facing crankshaft arm (outside).

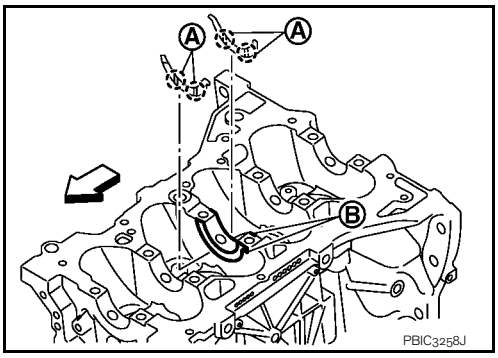

c. Install the main bearings (1) paying attention to the direction.
   - Install the one with oil holes (A) onto cylinder block and the one without oil holes onto main bearing cap.
   - Before installing main bearings, apply new engine oil to the bearing surface (inside). Do not apply engine oil to the back surface, but thoroughly clean it.
   - Ensure the oil holes on cylinder block and those on the corresponding bearing are aligned.

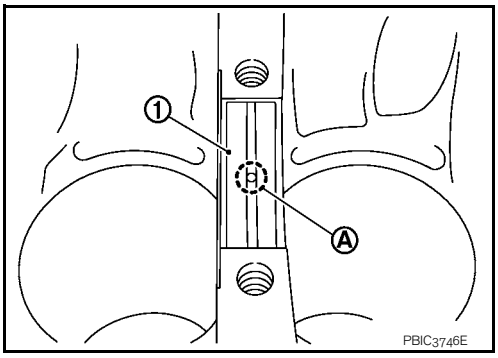

   - Install the main bearing in the position shown in the figure.

     1 : Cylinder block
     2 : Main bearing (upper)
     3 : Main bearing (lower)
     4 : Main bearing cap
     ⇦ : Engine front

     NOTE:
     Install the main bearing in the center position with the following dimension. For service operation, the center position can be checked visually.

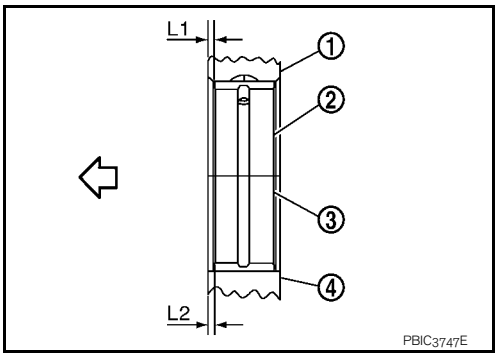

Journal position	No. 1	No. 2	No. 3	No. 4	No. 5

cardiagn.com

L1 [Unit: mm (in)]	1.65–2.05 (0.065-0.081)	1.25–1.65 (0.049-0.065)	2.30–2.70 (0.091-0.106)	1.25–1.65 (0.049-0.065)	1.60–2.00 (0.063-0.079)
L2 [Unit: mm (in)]	1.30–1.70 (0.051-0.067)	1.30–1.70 (0.051-0.067)	2.30–2.70 (0.091-0.106)	1.30–1.70 (0.051-0.067)	1.30–1.70 (0.051-0.067)

CAUTION:
Dimension L1 of journal No. 3 is the distance from the housing base end surface (bulk) (not the distance from the thrust bearing mounting end surface).

4. Install signal plate to crankshaft if removed.

a. Set the signal plate (1) with the flange facing toward the counter-weight side (engine front side) to the crankshaft rear surface.

A : Dowel pin hole

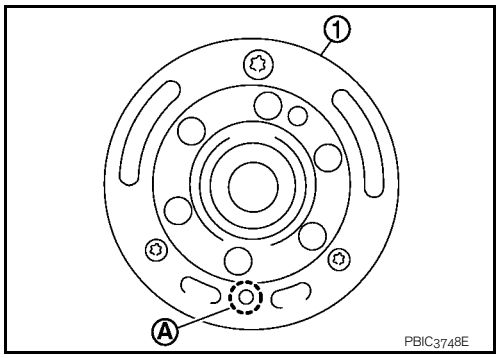

b. After positioning crankshaft and signal plate with positioning dowel pin, tighten bolt.
NOTE:
Dowel pin of crankshaft and signal plate is provided as a set for each.

c. Remove dowel pin.
CAUTION:
Be sure to remove dowel pin.

5. Install crankshaft to cylinder block.
- Make sure that crankshaft turns smoothly by hand.

CAUTION:
Never install rear oil seal yet.

6. Install main bearing caps.
- Install the main bearing cap while referring to the front mark (B) and the journal number stamp (A).

⇦ : Engine front

NOTE:
Main bearing cap cannot be replaced as a single parts, because it is machined together with cylinder block.

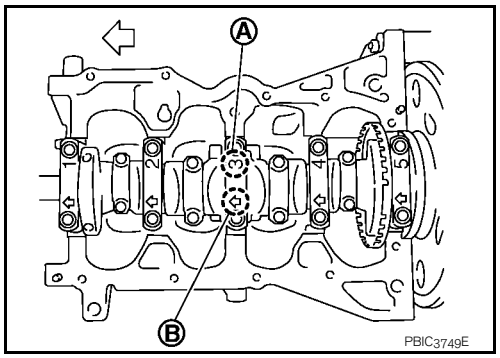

7. Tighten main bearing cap bolts in numerical order shown in the figure with the following steps.

⇦ : Engine front

a. Apply new engine oil to threads and seat surfaces of the mounting bolts.

b. Tighten main bearing cap bolts.

: 32.4 N·m (3.3 kg-m, 24 ft-lb)

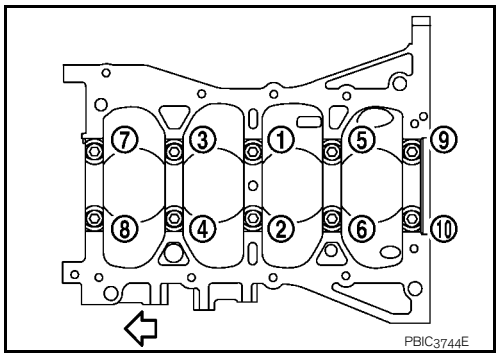

cardiagn.com

c. Turn main bearing cap bolts 60 degrees clockwise (angle tightening) in numerical order shown in the figure.

CAUTION:
Check and confirm the tightening angle by using the angle wrench [SST: KV10112100] (A) or protractor. Avoid judgment by visual inspection without the tool.

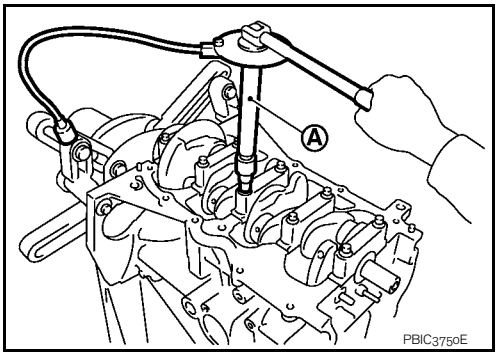

- After installing the mounting bolts, make sure that crankshaft can be rotated smoothly by hand.
- Check crankshaft end play. Refer to EM-101, "Inspection".

8. Install piston to connecting rod with the following procedure:

a. Set so that the front mark (A) on the piston head and the cylinder number (C) are in the position shown in the figure.

B : Oil hole
D : Connecting rod big end grade

NOTE:
The symbols without notes are for management.

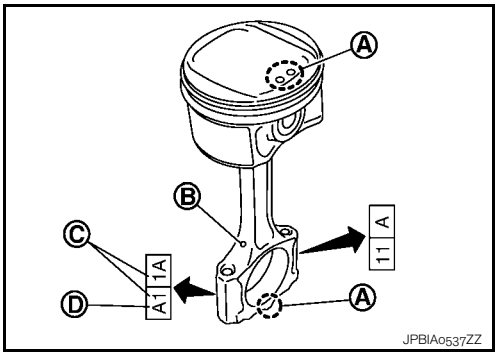

b. Press-fit the piston pin using the piston pin press stand (SST).

A : Drift [KV10109730]
B : Center cap [KV10110310]
C : Press stand [ST13030020]
D : Center shaft [KV10114120]
E : Spring [ST13030030]
F : For detail

CAUTION:
Press-fit the piston so as not to damage it.
NOTE:
The joint between the connecting rod and the piston pin is a press fit.

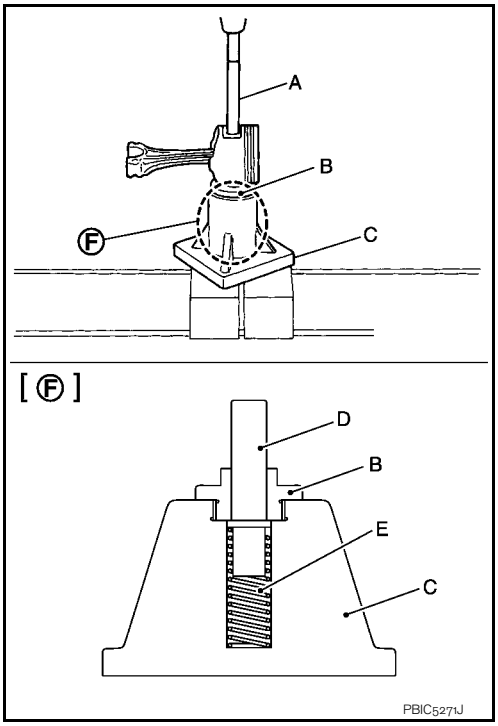

cardiagn.com

- Press-fit the piston pin (2) from piston surface “A” to the depth of 2.35 mm (0.092 in).

  1 : Connecting rod

  ⇦ : Press-fit direction

- After finishing work, make sure that the piston (3) moves freely.

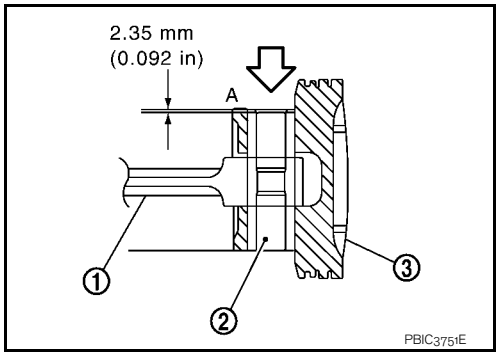

9. Using a piston ring expander (commercial service tool), install piston rings.

CAUTION:
- **Be careful not to damage piston.**
- **Be careful not to damage piston rings by expanding them excessively.**
- Position each ring with the gap as shown in the figure referring to the piston front mark (B).

  A : Oil ring upper or lower rail gap (either of them)

  C : Second ring and oil ring spacer gap

  D : Top ring gap

- Install second ring with the stamped mark (E) facing upward.

  Stamped mark:

  Second ring : R

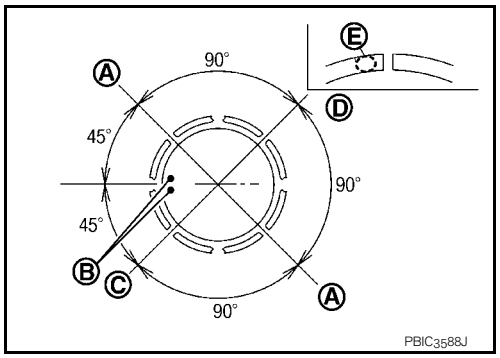

10. Install connecting rod bearings to connecting rod and connecting rod cap.
- When installing connecting rod bearings, apply new engine oil to the bearing surface (inside). Do not apply engine oil to the back surface, but thoroughly clean it.
- Install the bearing in the center position.

  NOTE:

  There is no stopper tab.
- Make sure that the oil holes on connecting rod and connecting rod bearing are aligned.
- Install the connecting rod in the dimension shown in the figure.

  1 : Connecting rod

  2 : Connecting rod bearing (upper)

  3 : Connecting rod bearing (lower)

  4 : Connecting rod cap

  ⇦ : Engine front

  Dimension “A” : 1.7 - 2.1 mm (0.067 - 0.083 in)

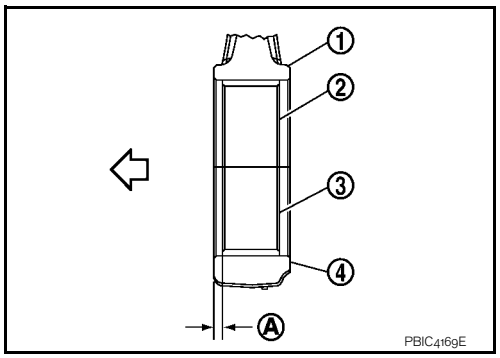

NOTE:

Install the connecting rod bearing in the center position with the dimension shown in the figure. For service operation, the center position can be checked visually.

11. Install piston and connecting rod assembly to crankshaft.
- Position crankshaft pin corresponding to connecting rod to be installed onto the bottom dead center.
- Apply new engine oil sufficiently to the cylinder bore, piston and crankshaft pin.
- Match the cylinder position with the cylinder number on connecting rod to install.

cardiagn.com

- Using the piston ring compressor (SST: EM03470000) (A) or suitable tool, install piston with the front mark on the piston head facing the front of the engine.
  CAUTION:
  - **Be careful not to damage matching surface with connecting rod cap.**
  - **Be careful not to damage the cylinder wall and crankshaft pin, resulting from an interference of the connecting rod big end.**

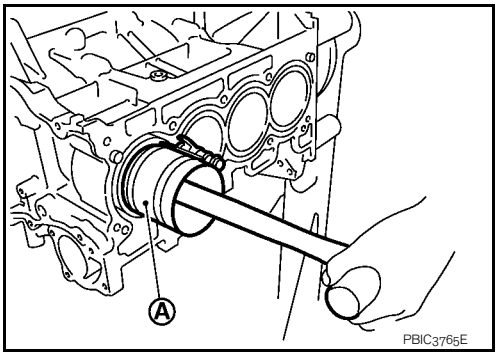

12. Install connecting rod cap.
    - Match the stamped cylinder number marks (C) on connecting rod with those on connecting rod cap to install.

    A : Front mark
    B : Oil hole
    D : Connecting rod big end grade

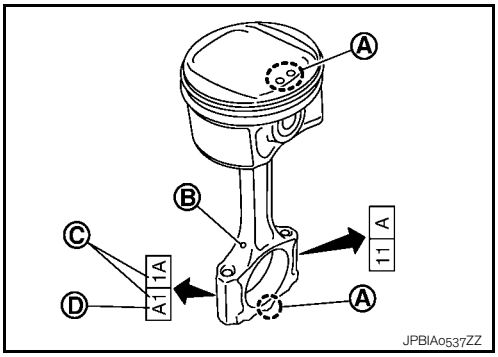

13. Inspect outer diameter of connecting rod cap bolts. Refer to EM-101, "Inspection".
14. Tighten connecting rod bolt with the following procedure:

a. Apply new engine oil to the threads and seats of connecting rod bolts.
b. Tighten bolts in several steps.

: 27.5 N·m (2.8 kg-m, 20 ft-lb)

c. Completely loosen bolts.

: 0 N·m (0 kg-m, 0 ft-lb)

d. Tighten bolts in several steps.

: 19.6 N·m (2.0 kg-m, 14 ft-lb)

e. Then turn all bolts 60 degrees clockwise (angle tightening).
   CAUTION:
   Confirm the tightening angle by using the angle wrench [SST: KV10112100] (A) or protractor. Avoid judgment by visual inspection without the tool.

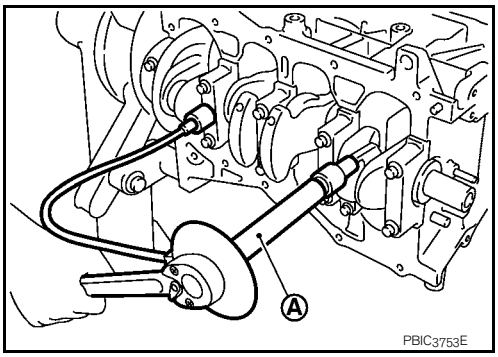

- After tightening connecting rod bolt, make sure that crankshaft rotates smoothly.
- Check the connecting rod side clearance. Refer to EM-101, "Inspection".

15. Install oil pan (upper). Refer to EM-89, "Exploded View".
    NOTE:
    Install the rear oil seal after installing the oil pan (upper).
16. Install rear oil seal. Refer to EM-89, "Removal and Installation".
17. Install flywheel.

cardiagn.com

- Secure crankshaft with a stopper plate [SST: KV11105210], and tighten mounting bolts crosswise over several times.

18. Install knock sensor (1).

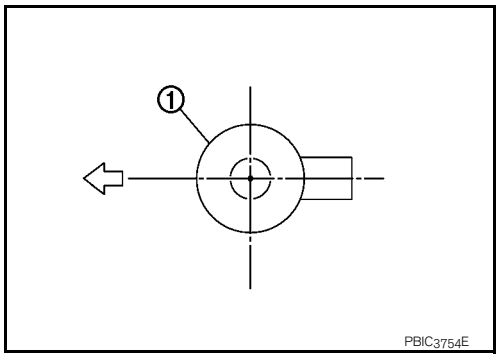

⇦ : Engine front

- Install connectors so that they are positioned towards the rear of the engine.

CAUTION:
- **Never tighten mounting bolt while holding the connector.**
- **If any impact by dropping is applied to knock sensor, replace it with a new one.**

NOTE:
- Make sure that there is no foreign material on the cylinder block mating surface and the back surface of knock sensor.
- Make sure that knock sensor does not interfere with other parts.

19. Install crankshaft position sensor (POS) and cover.
    - Tighten bolts with it seated completely.
20. For the oil level gauge guide (1), fix the position (B) shown in the figure to the water inlet clip (A) after inserting to the cylinder block side.

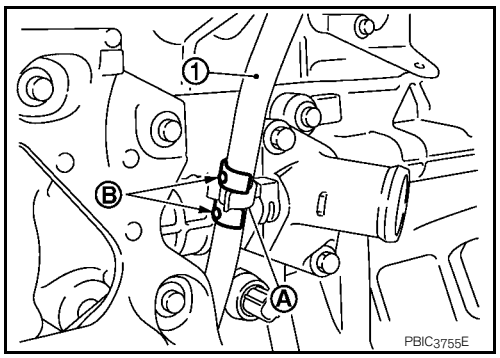

21. Assemble in the reverse order of disassembly after this step.

Inspection

INFOID:0000000000893892

CRANKSHAFT END PLAY

- Measure the clearance between thrust bearings and crankshaft arm when crankshaft is moved fully forward or backward with a dial indicator (A).

Standard and Limit : Refer to EM-120, "Cylinder Block".

- If the measured value exceeds the limit, replace thrust bearings, and measure again. If it still exceeds the limit, replace crankshaft also.

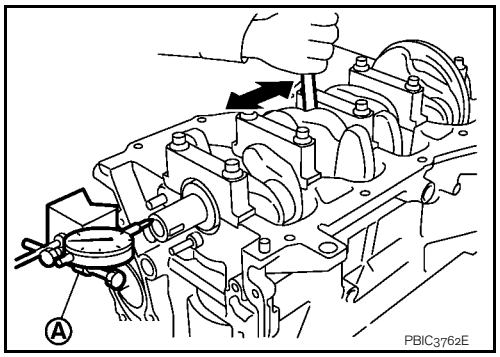

CONNECTING ROD SIDE CLEARANCE

- Measure the side clearance between connecting rod and crankshaft arm with a feeler gauge (A).

Standard : Refer to EM-120, "Cylinder Block".

- If the measured value exceeds the limit, replace connecting rod, and measure again. If it still exceeds the standard, replace crankshaft also.

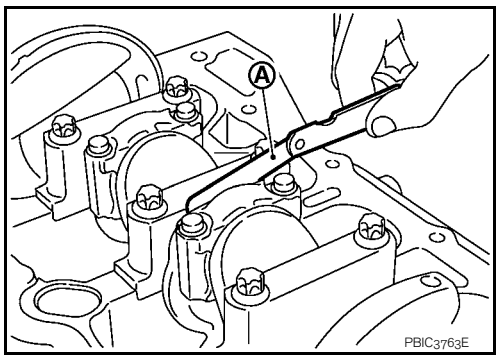

cardiagn.com

PISTON TO PISTON PIN OIL CLEARANCE

Piston Pin Hole Diameter

Measure the inner diameter of piston pin hole with an inside micrometer.

Standard : Refer to EM-120, "Cylinder Block".

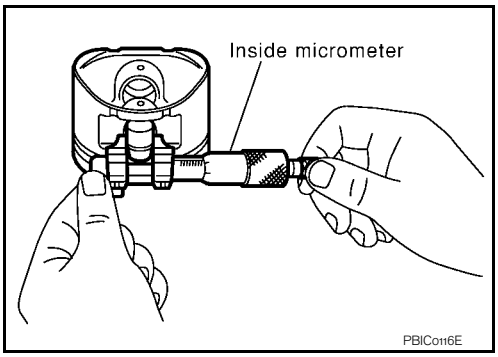

Piston Pin Outer Diameter

Measure the outer diameter of piston pin with a micrometer.

Standard : Refer to EM-120, "Cylinder Block".

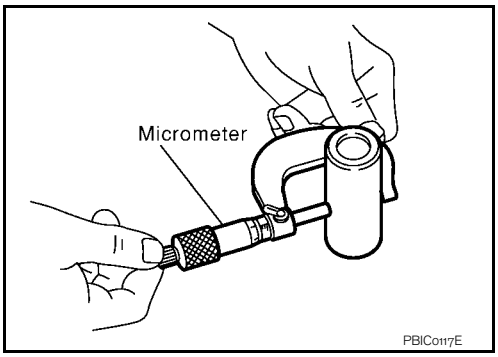

Piston to Piston Pin Oil Clearance

(Piston to piston pin oil clearance) = (Piston pin hole diameter) – (Piston pin outer diameter)

Standard : Refer to EM-120, "Cylinder Block".

- If oil clearance is out of the standard, replace piston and piston pin assembly.

PISTON RING SIDE CLEARANCE

- Measure the side clearance of piston ring and piston ring groove with a feeler gauge.

Standard and Limit : Refer to EM-120, "Cylinder Block".

- If the measured value exceeds the limit, replace piston ring, and measure again. If it still exceeds the limit, replace piston also.

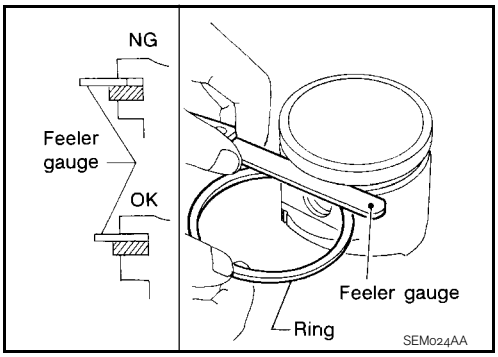

PISTON RING END GAP

- Make sure that cylinder bore inner diameter is within the specification. Refer to "Cylinder Bore Inner Diameter".
- Lubricate with new engine oil to piston and piston ring, and then insert piston ring until middle of cylinder with piston, and measure piston ring end gap with a feeler gauge.

Standard and Limit : Refer to EM-120, "Cylinder Block".

- If the measured value exceeds the limit, replace piston ring.

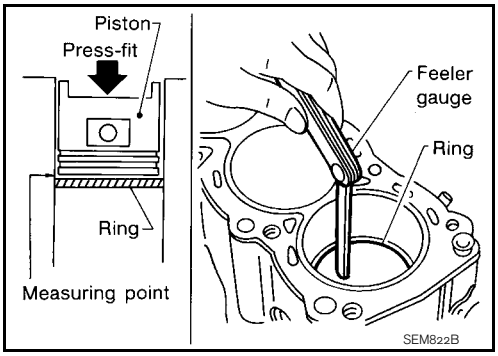

CONNECTING ROD BEND AND TORSION

cardiagn.com

- Check with a connecting rod aligner.

Limit : Refer to EM-120, "Cylinder Block".

- If it exceeds the limit, replace connecting rod assembly.

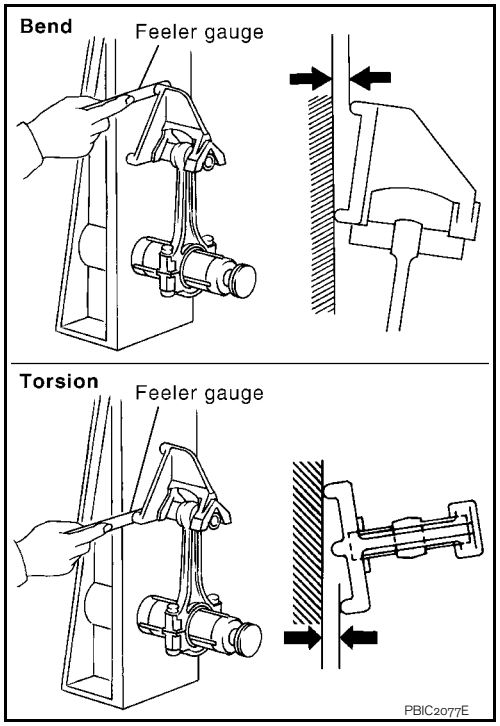

CONNECTING ROD BIG END DIAMETER

- Install connecting rod cap without connecting rod bearing installed, and tightening connecting rod bolts to the specified torque. Refer to EM-94, "Disassembly and Assembly".
- Measure the inner diameter of connecting rod big end with an inside micrometer.

Standard : Refer to EM-120, "Cylinder Block".

- If out of the standard, replace connecting rod assembly.

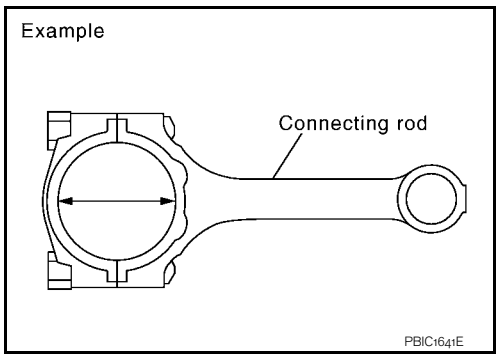

CONNECTING ROD SMALL END CLEARANCE

Connecting Rod Small End Inner Diameter

Measure the inner diameter of connecting rod small end with an inside micrometer.

Standard : Refer to EM-120, "Cylinder Block".

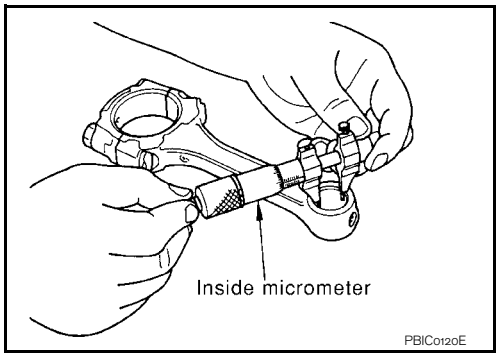

Piston Pin Outer Diameter

cardiagn.com

Measure the outer diameter of piston pin with a micrometer.

Standard : Refer to EM-120, "Cylinder Block".

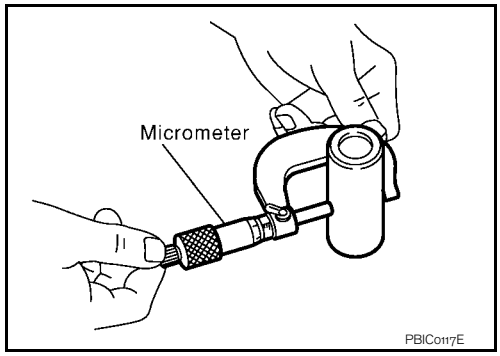

Connecting Rod Small End Clearance

(Connecting rod small end clearance) = (Connecting rod small end inner diameter) – (Piston pin outer diameter)

Standard : Refer to EM-120, "Cylinder Block".

- If the measured value is out of the standard, replace connecting rod assembly and/or piston and piston pin assembly.
- If replacing connecting rod assembly, refer to "CONNECTING ROD BEARING OIL CLEARANCE" to select connecting rod bearing.

CYLINDER BLOCK TOP SURFACE DISTORTION

- Using a scraper, remove gasket on the cylinder block surface, and also remove engine oil, scale, carbon, or other contamination.
  CAUTION:
  Be careful not to allow gasket flakes to enter engine oil or engine coolant passages.
- Measure the distortion on the cylinder block upper face at some different points in six directions with a straight edge and a feeler gauge.

Limit : Refer to EM-120, "Cylinder Block".

- If it exceeds the limit, replace cylinder block.

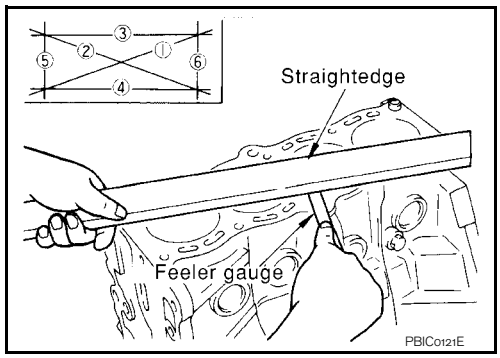

MAIN BEARING HOUSING INNER DIAMETER

- Install main bearing cap without main bearings installed, and tighten main bearing cap bolts to the specified torque. Refer to EM-94, "Disassembly and Assembly".
- Measure the position shown in the figure [5 mm (0.196 in) rearward from main bearing housing front side end surface) in the 2 directions as shown in the figure. The smaller one is the measured value.

1 : Cylinder block
2 : Main bearing cap
⇦ : Engine front

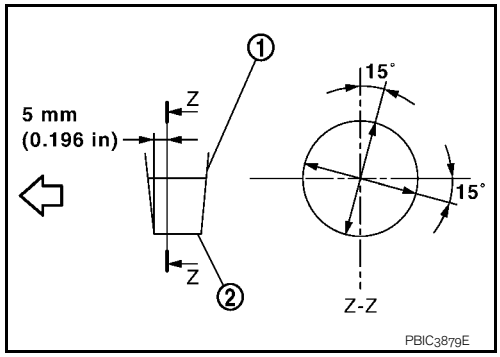

Standard : Refer to EM-120, "Cylinder Block".

- If out of the standard, replace cylinder block and main bearing caps as an assembly.
  NOTE:
  These components cannot be replaced as a single unit, because they were processed together.

PISTON TO CYLINDER BORE CLEARANCE

cardiagn.com

Cylinder Bore Inner Diameter

- Using a bore gauge, measure the cylinder bore for wear, out-of-round and taper at six different points on each cylinder. (“X” and “Y” directions at “A”, “B” and “C”) (“Y” is in longitudinal direction of the engine)

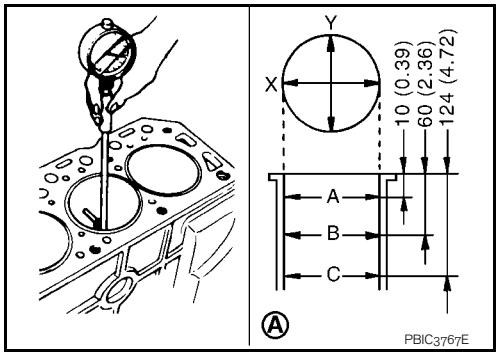

A : Unit: mm (in)

NOTE:
When determining cylinder bore grade, measure cylinder bore at “B” position.

Standard:

Cylinder bore inner diameter

: Refer to EM-120, "Cylinder Block".

Limit:

Out-of-round (Difference between“X”and“Y”)

Taper (Difference between“A”and“B”

: Refer to EM-120, "Cylinder Block".

- If the measured value exceeds the limit, or if there are scratches and/or seizure on the cylinder inner wall, replace cylinder block.
NOTE:
There is no service setting for oversized piston.

Piston Skirt Diameter

Measure the outer diameter of piston skirt with a micrometer.

Standard : Refer to EM-120, "Cylinder Block".

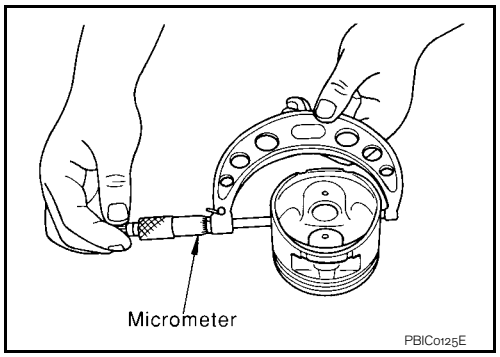

Piston to Cylinder Bore Clearance

Calculate by piston skirt diameter and cylinder bore inner diameter (direction “X”, position “B”).
(Clearance) = (Cylinder bore inner diameter) – (Piston skirt diameter)

Standard and Limit : Refer to EM-120, "Cylinder Block".

- If it exceeds the limit, replace piston and piston pin assembly and/or cylinder block.

CRANKSHAFT MAIN JOURNAL DIAMETER

- Measure the outer diameter of crankshaft main journals with a micrometer (A).

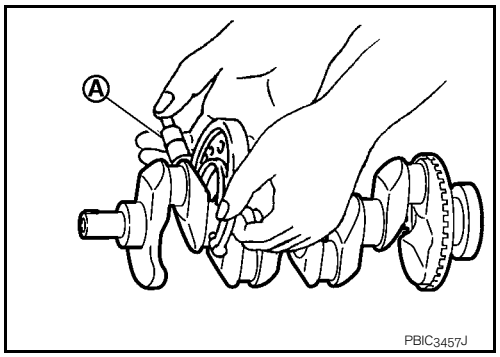

Standard : Refer to EM-120, "Cylinder Block".

- If out of the standard, measure the main bearing oil clearance. Then use undersize bearing. Refer to "MAIN BEARING OIL CLEARANCE".

cardiagn.com

CRANKSHAFT PIN JOURNAL DIAMETER

- Measure the outer diameter of crankshaft pin journal with a micrometer.

Standard : Refer to EM-120, "Cylinder Block".

- If out of the standard, measure the connecting rod bearing oil clearance. Then use undersize bearing. Refer to "CONNECTING ROD BEARING OIL CLEARANCE".

OUT-OF-ROUND AND TAPER OF CRANKSHAFT

- Measure the dimensions at four different points as shown in the figure on each main journal and pin journal with a micrometer.
- Out-of-round is indicated by the difference in dimensions between “X” and “Y” at “A” and “B”.
- Taper is indicated by the difference in dimension between “A” and “B” at “X” and “Y”.

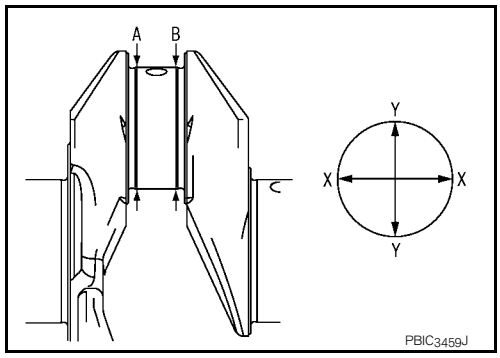

Limit:

Out-of-round (Difference between“X”and“Y”)

Taper (Difference between“A”and“B”)

: Refer to EM-120, "Cylinder Block".

- If the measured value exceeds the limit, correct or replace crankshaft.
- If corrected, measure the bearing oil clearance of the corrected main journal and/or pin journal. Then select main bearing and/or connecting rod bearing. Refer to "MAIN BEARING OIL CLEARANCE" and/or "CONNECTING ROD BEARING OIL CLEARANCE".

CRANKSHAFT RUNOUT

- Place a V-block on a precise flat table to support the journals on the both end of crankshaft.
- Place a dial indicator (A) straight up on the No. 3 journal.
- While rotating crankshaft, read the movement of the pointer on the dial indicator. (Total indicator reading)

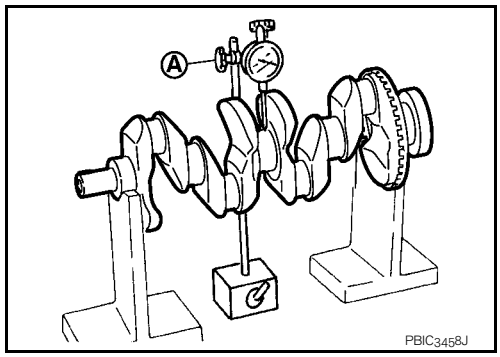

Limit : Refer to EM-120, "Cylinder Block".

- If it exceeds the limit, replace crankshaft.

CONNECTING ROD BEARING OIL CLEARANCE

Method by Calculation

- Install connecting rod bearings to connecting rod and cap, and tighten connecting rod bolts to the specified torque. Refer to EM-94, "Disassembly and Assembly".
- Measure the inner diameter of connecting rod bearing with an inside micrometer.
  (Bearing oil clearance) = (Connecting rod bearing inner diameter) – (Crankshaft pin journal diameter)

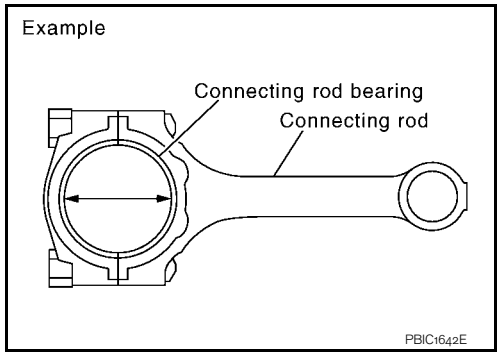

Standard and Limit

: Refer to EM-123, "Connecting Rod Bearing".

- If the clearance exceeds the limit, select proper connecting rod bearing according to connecting rod big end diameter and crankshaft pin journal diameter to obtain the specified bearing oil clearance. Refer to EM-110, "Connecting Rod Bearing".

Method of Using Plastigage

- Remove engine oil and dust on crankshaft pin and the surfaces of each bearing completely.
- Cut a plastigage slightly shorter than the bearing width, and place it in crankshaft axial direction, avoiding oil holes.

cardiagn.com

- Install connecting rod bearings to connecting rod and cap, and tighten connecting rod bolts to the specified torque. Refer to EM-94, "Disassembly and Assembly".

CAUTION:
Never rotate crankshaft.

- Remove connecting rod cap and bearing, and using the scale on the plastigage bag, measure the plastigage width.

NOTE:
The procedure when the measured value exceeds the limit is same as that described in the “Method by Calculation”.

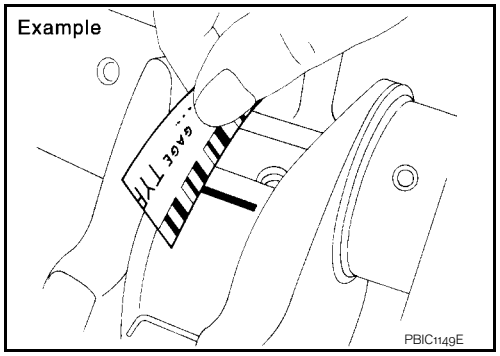

MAIN BEARING OIL CLEARANCE

Method by Calculation

- Install main bearings to cylinder block and main bearing cap, and tighten main bearing cap bolts to the specified torque. Refer to EM-94, "Disassembly and Assembly".
- Measure the inner diameter of main bearing with a bore gauge.

(Bearing oil clearance) = (Main bearing inner diameter) – (Crankshaft main journal diameter)

Standard : Refer to EM-124, "Main Bearing".

- If the clearance exceeds the limit, select proper main bearing according to main bearing inner diameter and crankshaft main journal diameter to obtain the specified bearing oil clearance. Refer to EM-112, "Main Bearing".

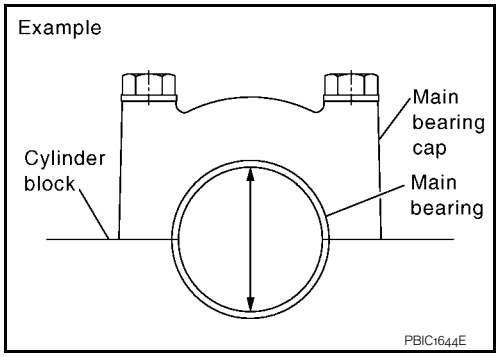

Method of Using Plastigage

- Remove engine oil and dust on crankshaft main journal and the surfaces of each bearing completely.
- Cut a plastigage slightly shorter than the bearing width, and place it in crankshaft axial direction, avoiding oil holes.
- Install main bearings to cylinder block and main bearing cap, and tighten main bearing cap bolts to the specified torque. Refer to EM-94, "Disassembly and Assembly".

CAUTION:
Never rotate crankshaft.

- Remove main bearing cap and bearings, and using the scale on the plastigage bag, measure the plastigage width.

NOTE:
The procedure when the measured value exceeds the limit is same as that described in the “Method by Calculation”.

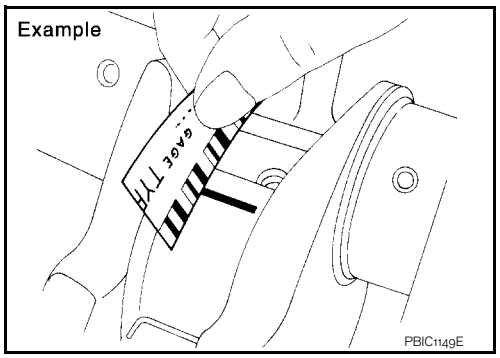

MAIN BEARING CRUSH HEIGHT

cardiagn.com

- When main bearing cap is removed after being tightened to the specified torque with main bearings installed, the tip end of bearing must protrude. Refer to EM-94, "Disassembly and Assembly".

Standard: There must be crush height.

- If the standard is not met, replace main bearings.

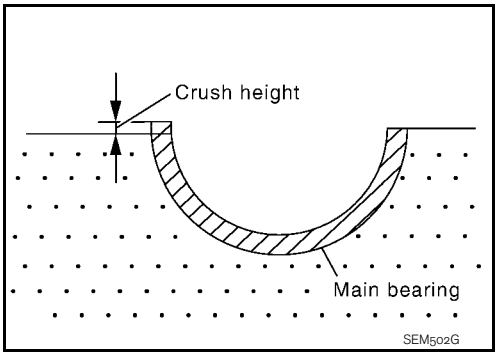

CONNECTING ROD BEARING CRUSH HEIGHT

- When connecting rod bearing cap is removed after being tightened to the specified torque with connecting rod bearings installed, the tip end of bearing must protrude. Refer to EM-94, "Disassembly and Assembly".

Standard: There must be crush height.

- If the standard is not met, replace connecting rod bearings.

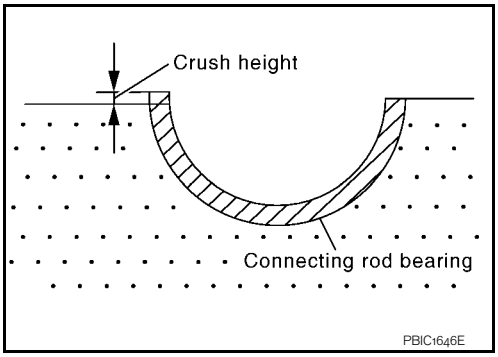

MAIN BEARING CAP BOLT OUTER DIAMETER

- Measure the outer diameters (“d_1”, “d_2”) at two positions as shown in the figure.
- If reduction appears in a position other than “d_2”, regard it as “d_2”.

Limit (“d_1”–“d_2”): 0.2 mm (0.008 in)

- If it exceeds the limit (a large difference in dimensions), replace main bearing cap bolt with a new one.

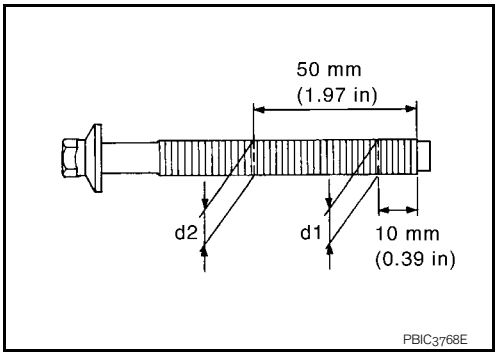

CONNECTING ROD CAP BOLT OUTER DIAMETER

- Measure the outer diameter “d” at position as shown in the figure.
- If reduction appears in a position other than “d”, regard it as “d”.

Limit: 7.75 mm (0.3051 in)

- When “d” falls below the limit (when it becomes thinner), replace connecting rod cap bolt with a new one.

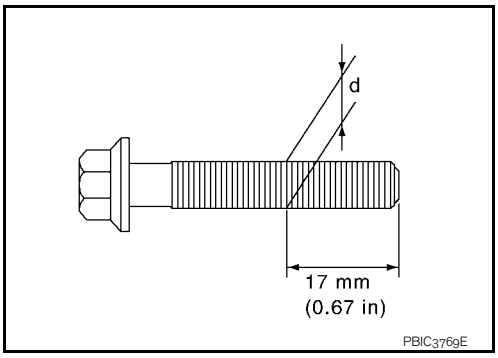

FLYWHEEL DEFLECTION

cardiagn.com

- Measure the deflection of flywheel contact surface to clutch with a dial indicator.

Standard : 0.25 mm (0.0098 in) or less.

- If measured value is out of the standard, replace flywheel.

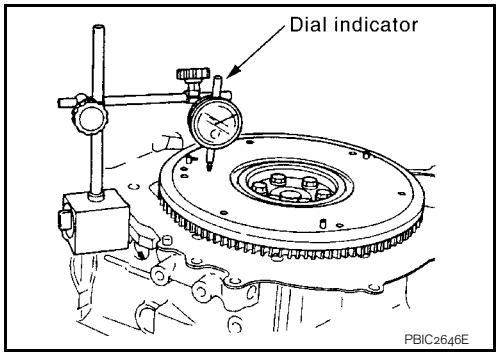

cardiagn.com

HOW TO SELECT PISTON AND BEARING

Description

INFOID:0000000000893893

Selection points	Selection parts	Selection items	Selection methods
Between cylinder block and crankshaft	Main bearing	Main bearing grade (bearing thickness)	Determined by match of cylinder block bearing housing grade (inner diameter of housing) and crankshaft journal grade (outer diameter of journal)
Between crankshaft and connecting rod	Connecting rod bearing	Connecting rod bearing grade (bearing thickness)	Combining service grades for connecting rod big end diameter and crankshaft pin outer diameter determine connecting rod bearing selection.

- The identification grade stamped on each part is the grade for the dimension measured in new condition. This grade cannot apply to reused parts.
- For reused or repaired parts, measure the dimension accurately. Determine the grade by comparing the measurement with the values of each selection table.
- For details of the measurement method of each part, the reuse standards and the selection method of the selective fitting parts, refer to the text.

Connecting Rod Bearing

INFOID:0000000000893895

WHEN NEW CONNECTING ROD AND CRANKSHAFT ARE USED

1. Apply connecting rod big end diameter grade stamped (C) on connecting rod side face to the row in the “Connecting Rod Bearing Selection Table”.

   A : Oil hole
   B : Cylinder number
   D : Front mark

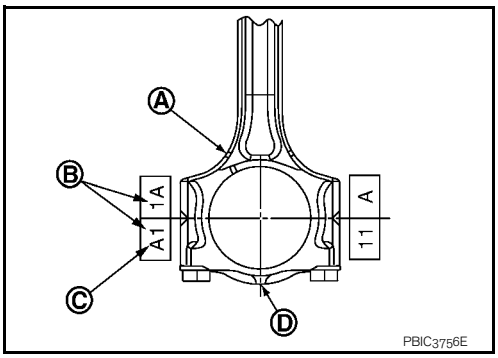

2. Apply crankshaft pin journal diameter grade stamped (B) on crankshaft front side to the column in the “Connecting Rod Bearing Selection Table”.

   A : Main journal diameter grade (No. 1 to 5 from left)
   B : Crankshaft pin journal diameter grade (No. 1 to 4 from left)

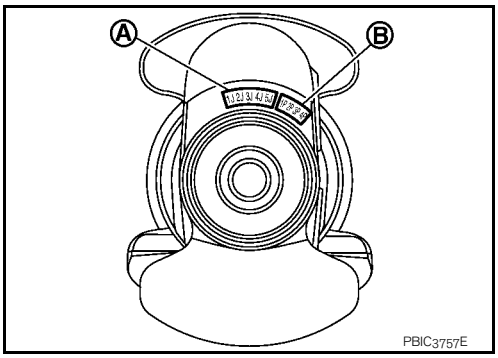

3. Read the symbol at the cross point of selected row and column in the “Connecting Rod Bearing Selection Table”.
4. Apply the symbol obtained to the “Connecting Rod Bearing Grade Table” to select connecting rod bearing.

WHEN CONNECTING ROD AND CRANKSHAFT ARE REUSED

1. Measure the dimensions of the connecting rod big end diameter and crankshaft pin journal diameter individually. Refer to EM-101, "Inspection".

cardiagn.com

2. Apply the measured dimension to the “Connecting Rod Bearing Selection Table”.
3. Read the symbol at the cross point of selected row and column in the “Connecting Rod Bearing Selection Table”.
4. Apply the symbol obtained to the “Connecting Rod Bearing Grade Table” to select connecting rod bearing.

Connecting Rod Bearing Selection Table

Connecting rod big end diameter / Crankshaft pin journal diameter		I.D. mark	A	B	C	D	E	F	G	H	J	K	L	M	N
		Hole diameter Unit: mm (in)	43.000 - 43.001 (1.6929 - 1.6929)	43.001 - 43.002 (1.6929 - 1.6930)	43.002 - 43.003 (1.6930 - 1.6930)	43.003 - 43.004 (1.6930 - 1.6931)	43.004 - 43.005 (1.6931 - 1.6931)	43.005 - 43.006 (1.6931 - 1.6931)	43.006 - 43.007 (1.6931 - 1.6932)	43.007 - 43.008 (1.6932 - 1.6932)	43.008 - 43.009 (1.6932 - 1.6933)	43.009 - 43.010 (1.6933 - 1.6933)	43.010 - 43.011 (1.6933 - 1.6933)	43.011 - 43.012 (1.6933 - 1.6934)	43.012 - 43.013 (1.6934 - 1.6934)
I.D. mark	Axle diameter Unit mm (in)														
A	39.971 - 39.970 (1.5737 - 1.5736)		0	0	0	0	0	01	01	01	1	1	1	12	12
B	39.970 - 39.969 (1.5736 - 1.5736)		0	0	0	0	01	01	01	1	1	1	12	12	12
C	39.969 - 39.968 (1.5736 - 1.5735)		0	0	0	01	01	01	1	1	1	12	12	12	2
D	39.968 - 39.967 (1.5735 - 1.5735)		0	0	01	01	01	1	1	1	12	12	12	2	2
E	39.967 - 39.966 (1.5735 - 1.5735)		0	01	01	01	1	1	1	12	12	12	2	2	2
F	39.966 - 39.965 (1.5735 - 1.5734)		01	01	01	1	1	1	12	12	12	2	2	2	23
G	39.965 - 39.964 (1.5734 - 1.5734)		01	01	1	1	1	12	12	12	2	2	2	23	23
H	39.964 - 39.963 (1.5734 - 1.5733)		01	1	1	1	12	12	12	2	2	2	23	23	23
J	39.963 - 39.962 (1.5733 - 1.5733)		1	1	1	12	12	12	2	2	2	23	23	23	3
K	39.962 - 39.961 (1.5733 - 1.5733)		1	1	12	12	12	2	2	2	23	23	23	3	3
L	39.961 - 39.960 (1.5733 - 1.5732)		1	12	12	12	2	2	2	23	23	23	3	3	3
M	39.960 - 39.959 (1.5732 - 1.5732)		12	12	12	2	2	2	23	23	23	3	3	3	34
N	39.959 - 39.958 (1.5732 - 1.5731)		12	12	2	2	2	23	23	23	3	3	3	34	34
P	39.958 - 39.957 (1.5731 - 1.5731)		12	2	2	2	23	23	23	3	3	3	34	34	34
R	39.957 - 39.956 (1.5731 - 1.5731)		2	2	2	23	23	23	3	3	3	34	34	34	4
S	39.956 - 39.955 (1.5731 - 1.5730)		2	2	23	23	23	3	3	3	34	34	34	4	4
T	39.955 - 39.954 (1.5730 - 1.5730)		2	23	23	23	3	3	3	34	34	34	4	4	4
U	39.954 - 39.953 (1.5730 - 1.5729)		23	23	23	3	3	3	34	34	34	4	4	4	4

PBIC3758E

Connecting Rod Bearing Grade Table

Connecting Rod Bearing Grade Table : Refer to EM-123, "Connecting Rod Bearing".

Undersize Bearings Usage Guide

- When the specified connecting rod bearing oil clearance is not obtained with standard size connecting rod bearings, use undersize (US) bearings.
- When using undersize (US) bearing, measure the connecting rod bearing inner diameter with bearing installed, and grind the crankshaft pin so that the connecting rod bearing oil clearance satisfies the standard.

CAUTION:

cardiagn.com

In grinding crankshaft pin to use undersize bearings, keep the fillet R (A) [0.8 - 1.2 mm (0.031 - 0.047 in)].

Bearing undersize table:

Refer to EM-123, "Connecting Rod Bearing".

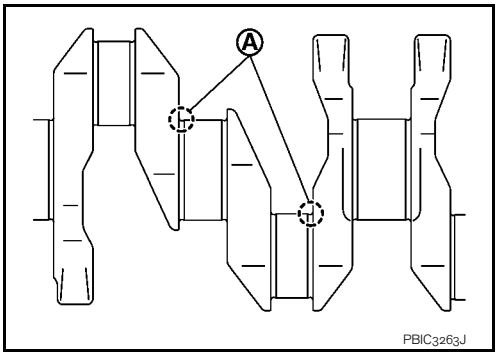

Main Bearing

INFOID:0000000000893896

HOW TO SELECT MAIN BEARING

When New Cylinder Block and Crankshaft Are Used

1. "Main Bearing Selection Table" rows correspond to main bearing housing grade on left side of cylinder block.

   A : Basic stamp mark

   ⇦ : Engine front

   - If there is a corrected stamp mark (B) on cylinder block, use it as a correct reference.

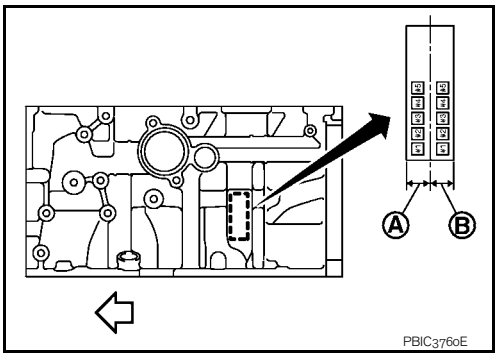

2. Apply main journal diameter grade stamped on crankshaft front side to column in the "Main Bearing Selection Table".

   A : Main journal diameter grade (No. 1 to 5 from left)

   B : Crankshaft pin journal diameter grade (No. 1 to 4 from left)

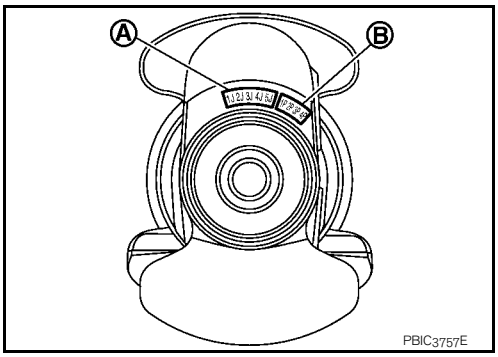

3. Read the symbol at the cross point of selected row and column in the "Main Bearing Selection Table".
4. Apply the symbol obtained to the "Main Bearing Grade Table" to select main bearing.
   NOTE:
   Service part is available as a set of both upper and lower.

When Cylinder Block and Crankshaft Are Reused

1. Measure the dimensions of the cylinder block main bearing housing inner diameter and crankshaft main journal diameter individually. Refer to EM-101, "Inspection".
2. Apply the measured dimension to the "Main Bearing Selection Table".
3. Read the symbol at the cross point of selected row and column in the "Main Bearing Selection Table".
4. Apply the symbol obtained to the "Main Bearing Grade Table" to select main bearing.

cardiagn.com

Main Bearing Selection Table

Crankshaft main journal diameter: I.D. mark	Axle diameter Unit mm (in)	A 51.997 - 51.998 (2.0471 - 2.0472)	B 51.998 - 51.999 (2.0472 - 2.0472)	C 51.999 - 52.000 (2.0472 - 2.0472)	D 52.000 - 52.001 (2.0472 - 2.0472)	E 52.001 - 52.002 (2.0473 - 2.0473)	F 52.002 - 52.003 (2.0473 - 2.0473)	G 52.003 - 52.004 (2.0474 - 2.0474)	H 52.004 - 52.005 (2.0474 - 2.0474)	J 52.005 - 52.006 (2.0474 - 2.0474)	K 52.006 - 52.007 (2.0475 - 2.0475)	L 52.007 - 52.008 (2.0475 - 2.0475)	M 52.0008 - 52.009 (2.0476 - 2.0476)	N 52.009 - 52.010 (2.0476 - 2.0476)	P 52.010 - 52.011 (2.0476 - 2.0476)	R 52.011 - 52.012 (2.0477 - 2.0477)	S 52.012 - 52.013 (2.0477 - 2.0477)	T 52.013 - 52.014 (2.0478 - 2.0478)	U 52.014 - 52.015 (2.0478 - 2.0478)	V 52.015 - 52.016 (2.0478 - 2.0478)	W 52.016 - 52.017 (2.0479 - 2.0479)
A	47.979 - 47.978 (1.8889 - 1.8889)	0	0	0	0	0	0	0	01	01	01	1	1	1	12	12	12	2	2	2	23
B	47.978 - 47.977 (1.8889 - 1.8889)	0	0	0	0	0	0	01	01	01	1	1	1	12	12	12	2	2	2	23	23
C	47.977 - 47.976 (1.8889 - 1.8888)	0	0	0	0	0	01	01	01	1	1	1	12	12	12	2	2	2	23	23	23
D	47.976 - 47.975 (1.8888 - 1.8888)	0	0	0	0	01	01	01	1	1	1	12	12	12	2	2	2	23	23	23	3
E	47.975 - 47.974 (1.8888 - 1.8887)	0	0	0	01	01	01	1	1	1	12	12	12	2	2	2	23	23	23	3	3
F	47.974 - 47.973 (1.8887 - 1.8887)	0	0	01	01	01	1	1	1	12	12	12	2	2	2	23	23	23	3	3	3
G	47.973 - 47.972 (1.8887 - 1.8887)	0	01	01	01	1	1	1	12	12	12	2	2	2	23	23	23	3	3	3	34
H	47.972 - 47.971 (1.8887 - 1.8886)	01	01	01	1	1	1	12	12	12	2	2	2	23	23	23	3	3	3	34	34
J	47.971 - 47.970 (1.8886 - 1.8886)	01	01	1	1	1	12	12	12	2	2	2	23	23	23	3	3	3	34	34	34
K	47.970 - 47.969 (1.8886 - 1.8885)	01	1	1	1	12	12	12	2	2	2	23	23	23	3	3	3	34	34	34	4
L	47.969 - 47.968 (1.8885 - 1.8885)	1	1	1	12	12	12	2	2	2	23	23	23	3	3	3	34	34	34	4	4
M	47.968 - 47.967 (1.8885 - 1.8885)	1	1	12	12	12	2	2	2	23	23	23	3	3	3	34	34	34	4	4	4
N	47.967 - 47.966 (1.8885 - 1.8884)	1	12	12	12	2	2	2	23	23	23	3	3	3	34	34	34	4	4	4	45
P	47.966 - 47.965 (1.8884 - 1.8884)	12	12	12	2	2	2	23	23	23	3	3	3	34	34	34	4	4	4	45	45
R	47.965 - 47.964 (1.8884 - 1.8883)	12	12	2	2	2	23	23	23	3	3	3	34	34	34	4	4	4	45	45	45
S	47.964 - 47.963 (1.8883 - 1.8883)	12	2	2	2	23	23	23	3	3	3	34	34	34	4	4	4	45	45	45	5
T	47.963 - 47.962 (1.8883 - 1.8883)	2	2	2	23	23	23	3	3	3	34	34	34	4	4	4	45	45	45	5	5
U	47.962 - 47.961 (1.8883 - 1.8882)	2	2	23	23	23	3	3	3	34	34	34	4	4	4	45	45	45	5	5	5
V	47.961 - 47.960 (1.8882 - 1.8882)	2	23	23	23	3	3	3	34	34	34	4	4	4	45	45	45	5	5	5	5
W	47.960 - 47.959 (1.8882 - 1.8881)	23	23	23	3	3	3	34	34	34	4	4	4	45	45	45	5	5	5	5	5

PBIC3759E

Main Bearing Grade Table

Main Bearing Grade Table : Refer to EM-124, "Main Bearing".

Use Undersize Bearing Usage Guide

- When the specified main bearing oil clearance is not obtained with standard size main bearings, use undersize (US) bearing.
- When using undersize (US) bearing, measure the main bearing inner diameter with bearing installed, and grind main journal so that the main bearing oil clearance satisfies the standard.

CAUTION:

cardiagn.com

In grinding crankshaft main journal to use undersize bearings, keep fillet R (A) [0.8 - 1.2 mm (0.031 - 0.047 in)].

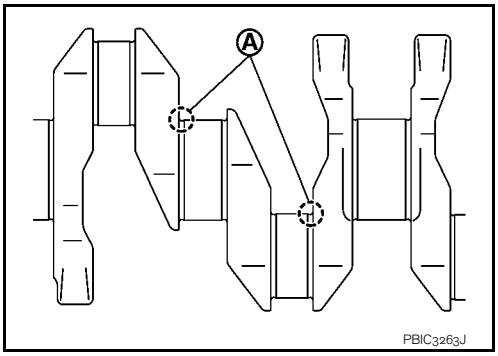

Bearing undersize table:

Refer to EM-124, "Main Bearing".

cardiagn.com

SERVICE DATA AND SPECIFICATIONS (SDS)

SERVICE DATA AND SPECIFICATIONS (SDS)

General Specification

INFOID:0000000000893897

GENERAL SPECIFICATIONS

Engine type		HR16DE
Cylinder arrangement		In-line 4
Displacement cm^3 (cu in)		1,598 (97.51)
Bore and stroke mm (in)		78.0 x 83.6 (3.071 x 3.291)
Valve arrangement		DOHC
Firing order		1-3-4-2
Number of piston rings	Compression	2
	Oil	1
Number of main bearings		4
Compression ratio		10.7
Compression pressure kPa (bar, kg/cm^2, psi)/200 rpm	Standard	1,500 (15.0, 15.3, 217.5)
	Minimum	1,471 (14.7, 15.0, 213.3)
	Differential limit between cylinders	6.2 (0.06, 0.06, 0.9)
Valve timing (Intake valve timing control - “ON”)		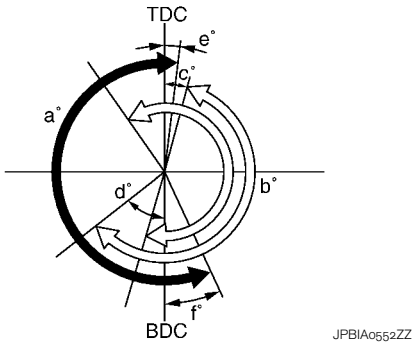

Unit: degree

a	b	c	d	e	f
208	228	-11 (24)	59 (24)	4	24

Drive Belts

INFOID:0000000001083029

BELT DEFLECTION:

Location		Deflection adjustment *		Unit: mm (in)
		Used belt		New belt
		Limit	After adjusted	
Drive belt	With A/C models	7.9 (0.31)	4.8 - 5.3 (0.19 - 0.21)	4.2 - 4.5 (0.17 - 0.18)
	Without A/C models	7.1 (0.28)	4.3 - 4.7 (0.17 - 0.19)	3.6 - 3.9 (0.14 - 0.15)
Applied pushing force		98 N (10 kg, 22 lb)		

*: When engine is cold.

BELT TENSION AND FREQUENCY:

cardiagn.com

Location		Tension adjustment *		Unit: N (kg, lb)	Frequency adjustment *		Unit: Hz
		Used belt		New belt	Used belt		New belt
		Limit	After adjusted		Limit	After adjusted	
Drive belt	With A/C models	500 (51.0, 112)	876 - 964 (89.4 - 98.3, 197 - 217)	1064 - 1152 (108.5 - 117.5, 239 - 259)	163	216 - 225	238 - 246
	Without A/C models	500 (51.0, 112)	876 - 964 (89.4 - 98.3, 197 - 217)	1064 - 1152 (108.5 - 117.5, 239 - 259)	183	242 - 252	266 - 276

*: When engine is cold.

Spark Plug

INFOID:0000000000893899

SPARK PLUG (PLATINUM-TIPPED TYPE)

Unit: mm (in)

Make	NGK
Standard type	PLZKAR6A-11
Gap (Nominal)	1.1 (0.043)

Exhaust Manifold

INFOID:0000000000893901

EXHAUST MANIFOLD

Unit: mm (in)

Items		Limit
Surface distortion	Exhaust manifold	0.3 (0.012)

Camshaft

INFOID:0000000000893902

CAMSHAFT

Unit: mm (in)

Items	Standard	Limit
Camshaft runout [TIR*]	0.02 (0.0008)	0.1 (0.004)

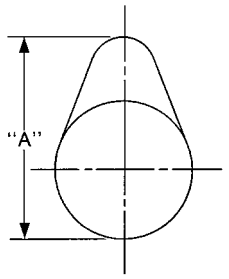

SEM671

Camshaft cam height "A"	Intake	41.705 - 41.895 (1.6419 - 1.6494)	—
	Exhaust	40.175 - 40.365 (1.5817 - 1.5892)	—
Camshaft journal diameter	No. 1	27.935 - 27.955 (1.0998 - 1.1006)	—
	No. 2, 3, 4, 5	24.950 - 24.970 (0.9823 - 0.9831)	—
Camshaft bracket inner diameter	No. 1	28.000 - 28.021 (1.1024 - 1.1032)	—
	No. 2, 3, 4, 5	25.000 - 25.021 (0.9843 - 0.9851)	—
Camshaft journal oil clearance	No. 1	0.045 - 0.086 (0.0018 - 0.0034)	0.15 (0.0059)
	No. 2, 3, 4, 5	0.030 - 0.071 (0.0012 - 0.0028)	

cardiagn.com

Items	Standard	Limit
Camshaft end play	0.075 - 0.153 (0.0030 - 0.0060)	0.2 (0.008)
Camshaft sprocket runout [TIR*]	—	0.15 (0.0059)

*: Total indicator reading

VALVE LIFTER

Unit: mm (in)

Items	Standard
Valve lifter outer diameter	29.977 - 29.987 (1.1802 - 1.1806)
Valve lifter hole diameter	30.000 - 30.021 (1.1811 - 1.1819)
Valve lifter clearance	0.013 - 0.044 (0.0005 - 0.0017)

VALVE CLEARANCE

Unit: mm (in)

Items	Cold	Hot* (reference data)
Intake	0.26 - 0.34 (0.010 - 0.013)	0.304 - 0.416 (0.012 - 0.016)
Exhaust	0.29 - 0.37 (0.011 - 0.015)	0.308 - 0.432 (0.012 - 0.017)

*: Approximately 80°C (176°F)

AVAILABLE VALVE LIFTER

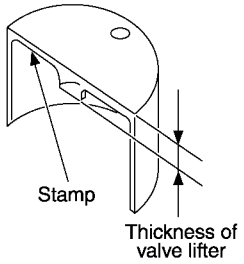

KBIA0119E

Thickness mm (in)	Identification mark
3.00 (0.1181)	300
3.02 (0.1189)	302
3.04 (0.1197)	304
3.06 (0.1205)	306
3.08 (0.1213)	308
3.10 (0.1220)	310
3.12 (0.1228)	312
3.14 (0.1236)	314
3.16 (0.1244)	316
3.18 (0.1252)	318
3.20 (0.1260)	320
3.22 (0.1268)	322
3.24 (0.1276)	324
3.26 (0.1283)	326
3.28 (0.1291)	328
3.30 (0.1299)	330
3.32 (0.1307)	332

cardiagn.com

Thickness mm (in)	Identification mark
3.34 (0.1315)	334
3.36 (0.1323)	336
3.38 (0.1331)	338
3.40 (0.1339)	340
3.42 (0.1346)	342
3.44 (0.1354)	344
3.46 (0.1362)	346
3.48 (0.1370)	348
3.50 (0.1378)	350

Cylinder Head

INFOID:0000000000893903

CYLINDER HEAD

Unit: mm (in)

Items	Standard	Limit
Head surface distortion	—	0.1 (0.004)
Normal cylinder head height “H”	125.0 (4.92)	—

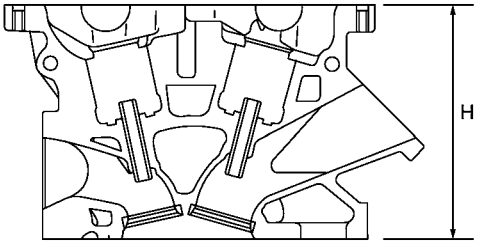

PBIC0924E

VALVE DIMENSIONS

Unit: mm (in)

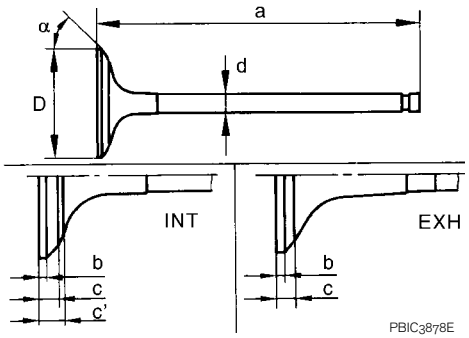

PBIC3878E

Valve head diameter “D”	Intake	31.0 - 31.3 (1.220 - 1.232)
	Exhaust	25.3 - 25.6 (0.996 - 1.008)
Valve length “a”	Intake	101.65 (4.002)
	Exhaust	102.46 (4.034)
“b”	Intake	1.0 (0.039)
	Exhaust	

cardiagn.com

"c"	Intake	2.1 - 2.8 (0.083 - 0.110)
	Exhaust	2.3 - 3.0 (0.091 - 0.118)
"c′"	Intake	3.0 (0.118)
	Exhaust	–
Valve stem diameter "d "	Intake	4.965 - 4.980 (0.1955 - 0.1961)
	Exhaust	4.955 - 4.970 (0.1951 - 0.1957)
Valve seat angle "α"	Intake	45°15′ - 45°45′
	Exhaust	

VALVE GUIDE

Unit: mm (in)

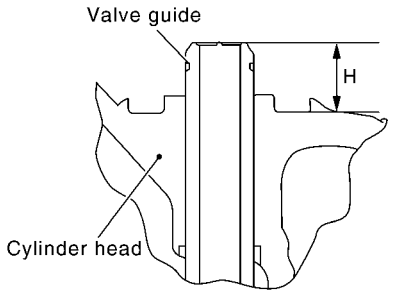

PBIC2187E

Items		Standard	Oversize (service) [0.2 (0.008)]
Valve guide	Outer diameter	9.023 - 9.034 (0.3552 - 0.3557)	9.223 - 9.234 (0.3631 - 0.3635)
	Inner diameter (Finished size)	5.000 - 5.018 (0.1969 - 0.1976)	
Cylinder head valve guide hole diameter		8.975 - 8.996 (0.3533 - 0.3542)	9.175 - 9.196 (0.3612 - 0.3620)
Interference fit of valve guide		0.027 - 0.059 (0.0011 - 0.0023)	
Items		Standard	Limit
Valve guide clearance	Intake	0.020 - 0.053 (0.0008 - 0.0021)	0.1 (0.004)
	Exhaust	0.030 - 0.063 (0.0012 - 0.0025)	
Projection length "H"		11.4 - 11.8 (0.449 - 0.465)	

VALVE SEAT

Unit: mm (in)

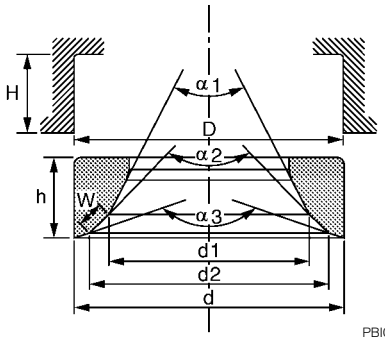

PBIC2745E

Items		Standard	Oversize (service) [0.5 (0.02)]
Cylinder head seat recess diameter "D"	Intake	31.400 - 31.416 (1.2362 - 1.2368)	31.900 - 31.916 (1.2559 - 1.2565)
	Exhaust	25.900 - 25.916 (1.0197 - 1.0203)	26.400 - 26.416 (1.0394 - 1.0400)
Valve seat outer diameter "d"	Intake	31.497 - 31.513 (1.2400 - 1.2407)	31.997 - 32.013 (1.2597 - 1.2604)
	Exhaust	25.997 - 26.013 (1.0235 - 1.0241)	26.497 - 26.513 (1.0432 - 1.0438)

cardiagn.com

Valve seat interference fit	Intake	0.081 - 0.113 (0.0032 - 0.0044)	
	Exhaust		
Diameter “d1”*1	Intake	29.0 (1.142)	
	Exhaust	23.0 (0.906)	
Diameter “d2”*2	Intake	30.3 - 30.8 (1.193 - 1.213)	
	Exhaust	24.6 - 25.1 (0.969 - 0.988)	
Angle “α1”	Intake	60°	
	Exhaust	45°	
Angle “α2”	Intake	88°45′ - 90°15′	
	Exhaust		
Angle “α3”	Intake	120°	
	Exhaust		
Contacting width “W”*3	Intake	1.05 - 1.35 (0.0413 - 0.0531)	
	Exhaust	1.25 - 1.55 (0.0492 - 0.0610)	
Height “h”	Intake	6.0 (0.236)	5.45 (0.215)
	Exhaust		5.43 (0.214)
Depth “H”		6.0 (0.236)	

*1 : Diameter made by intersection point of conic angles α1 and α2

*2 : Diameter made by intersection point of conic angles α2 and α3

*3 : Machining data

VALVE SPRING

Items	Standard
Free height	42.26 mm (1.6638 in)
Installation height	32.40 mm (1.2756 in)
Installation load	136 - 154 N (13.9 - 15.7 kg, 31 - 35 lb)
Height during valve open	23.96 mm (0.9433 in)
Load with valve open	262 - 296 N (26.7 - 30.2 kg, 59 - 67 lb)

Items	Limit
Valve spring squareness	1.8 mm (0.071 in)

Cylinder Block

INFOID:0000000000893904

CYLINDER BLOCK

Unit: mm (in)

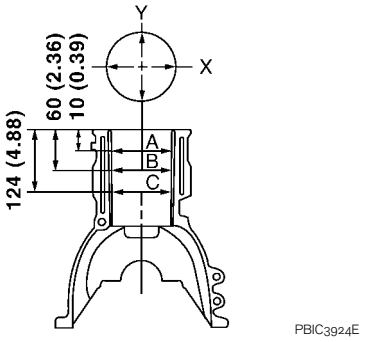

Cylinder block top surface distortion	Limit	0.1 (0.004)

cardiagn.com

Cylinder bore inner diameter	Standard		78.000 - 78.015 (3.0709 - 3.0715)
Out-of-round	Limit		0.015 (0.0006)
Taper			0.010 (0.0004)
Cylinder block main bearing housing inner diameter grade		Grade No. A	51.997 - 51.998 (2.0471 - 2.0472)
		Grade No. B	51.998 - 51.999 (2.0472 - 2.0472)
		Grade No. C	51.999 - 52.000 (2.0472 - 2.0472)
		Grade No. D	52.000 - 52.001 (2.0472 - 2.0473)
		Grade No. E	52.001 - 52.002 (2.0473 - 2.0473)
		Grade No. F	52.002 - 52.003 (2.0473 - 2.0474)
		Grade No. G	52.003 - 52.004 (2.0474 - 2.0474)
		Grade No. H	52.004 - 52.005 (2.0474 - 2.0474)
		Grade No. J	52.005 - 52.006 (2.0474 - 2.0475)
		Grade No. K	52.006 - 52.007 (2.0475 - 2.0475)
		Grade No. L	52.007 - 52.008 (2.0475 - 2.0476)
		Grade No. M	52.008 - 52.009 (2.0476 - 2.0476)
		Grade No. N	52.009 - 52.010 (2.0476 - 2.0476)
		Grade No. P	52.010 - 52.011 (2.0476 - 2.0477)
		Grade No. R	52.011 - 52.012 (2.0477 - 2.0477)
		Grade No. S	52.012 - 52.013 (2.0477 - 2.0478)
		Grade No. T	52.013 - 52.014 (2.0478 - 2.0478)
		Grade No. U	52.014 - 52.015 (2.0478 - 2.0478)
		Grade No. V	52.015 - 52.016 (2.0478 - 2.0479)
		Grade No. W	52.016 - 52.017 (2.0479 - 2.0479)
Difference in inner diameter between cylinders	Standard		Less than 0.03 (0.0012)

AVAILABLE PISTON

Unit: mm (in)

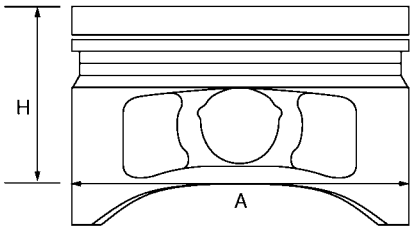

PBICo188E

Item	Standard	Limit
Piston skirt diameter “A”	77.965 - 77.980 (3.0695 - 3.0701)	—
Measure point “H”	37.1 (1.461)	—
Piston pin hole diameter	19.006 - 19.012 (0.7483 - 0.7485)	—
Piston to cylinder bore clearance	0.020 - 0.050 (0.0008 - 0.0020)	0.09 (0.0035)

PISTON RING

Unit: mm (in)

Items		Standard	Limit
Piston ring side clearance	Top	0.040 - 0.080 (0.0016 - 0.0031)	0.11 (0.0043)
	2nd	0.030 - 0.070 (0.0012 - 0.0028)	0.10 (0.0039)
	Oil (rail ring)	0.045 - 0.125 (0.0018 - 0.0049)	—
Piston ring end gap	Top	0.20- 0.30 (0.0079 - 0.0118)	0.50 (0.0197)
	2nd	0.35 - 0.50 (0.0138 - 0.0197)	0.66 (0.0260)
	Oil (rail ring)	0.20 - 0.60 (0.0079 - 0.0236)	0.92 (0.0362)

PISTON PIN

cardiagn.com

Unit: mm (in)

Piston pin outer diameter		18.996 - 19.002 (0.7479 - 0.7481)
Piston to piston pin oil clearance	Standard	0.008 - 0.012 (0.0003 - 0.0005)

CONNECTING ROD

Unit: mm (in)

Center distance		129.84 - 129.94 (5.11 - 5.12)
Bend [per 100 (3.94)]	Limit	0.15 (0.0059)
Torsion [per 100 (3.94)]	Limit	0.30 (0.0118)
Connecting rod small end clearance	Standard	–0.018 - –0.044 (–0.0007 - –0.0017)
Connecting rod small end inner diameter	Standard	18.958 - 18.978 (0.7464 - 0.7472)
Connecting rod side clearance	Standard	0.200 - 0.352 (0.0079 - 0.0139)
Connecting rod big end diameter	Grade No. A	43.000 - 43.001 (1.6929 - 1.6929)
	Grade No. B	43.001 - 43.002 (1.6929 - 1.6930)
	Grade No. C	43.002 - 43.003 (1.6930 - 1.6930)
	Grade No. D	43.003 - 43.004 (1 6930 - 1.6931)
	Grade No. E	43.004 - 43.005 (1.6931 - 1.6931)
	Grade No. F	43.005 - 43.006 (1.6931 - 1.6931)
	Grade No. G	43.006 - 43.007 (1.6931 - 1.6932)
	Grade No. H	43.007 - 43.008 (1.6932 - 1.6932)
	Grade No. J	43.008 - 43.009 (1.6932 - 1.6933)
	Grade No. K	43.009 - 43.010 (1.6933 - 1.6933)
	Grade No. L	43.010 - 43.011 (1.6933 - 1.6933)
	Grade No. M	43.011 - 43.012 (1.6933 - 1.6934)
	Grade No. N	43.012 - 43.013 (1.6934 - 1.6934)

CRANKSHAFT

Unit: mm (in)

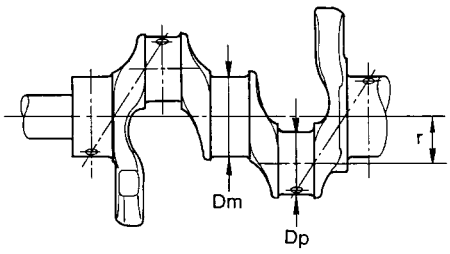

SEM645

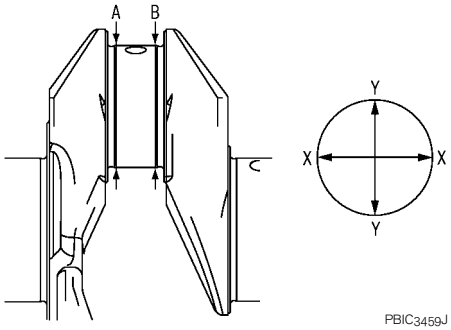

PBIC3459J

Center distance “r”		41.68 - 41.76 (1.6409 - 1.6441)
Out-of-round	Limit	0.003 (0.0001)
Taper	Limit	0.004 (0.0002)
Runout [TIR*]	Limit	0.10 (0.0039)
Crankshaft end play	Standard	0.098 - 0.260 (0.0039 - 0.0102)
	Limit	0.35 (0.0138)

cardiagn.com

Crankshaft pin journal diameter grade. “Dp”	Grade No. A	39.971 - 39.970 (1.5737 - 1.5736)
	Grade No. B	39.970 - 39.969 (1.5736 - 1.5736)
	Grade No. C	39.969 - 39.968 (1.5736 - 1.5735)
	Grade No. D	39.968 - 39.967 (1.5735 - 1.5735)
	Grade No. E	39.967 - 39.966 (1.5735 - 1.5735)
	Grade No. F	39.966 - 39.965 (1.5735 - 1.5734)
	Grade No. G	39.965 - 39.964 (1.5734 - 1.5734)
	Grade No. H	39.964 - 39.963 (1.5734 - 1.5733)
	Grade No. J	39.963 - 39.962 (1.5733 - 1.5733)
	Grade No. K	39.962 - 39.961 (1.5733 - 1.5733)
	Grade No. L	39.961 - 39.960 (1.5733 - 1.5732)
	Grade No. M	39.960 - 39.959 (1.5732 - 1.5732)
	Grade No. N	39.959 - 39.958 (1.5732 - 1.5731)
	Grade No. P	39.958 - 39.957 (1.5731 - 1.5731)
	Grade No. R	39.957 - 39.956 (1.5731 - 1.5731)
	Grade No. S	39.956 - 39.955 (1.5731 - 1.5730)
	Grade No. T	39.955 - 39.954 (1.5730 - 1.5730)
	Grade No. U	39.954 - 39.953 (1.5730 - 1.5729)
Crankshaft main journal diameter grade. “Dm”	Grade No. A	47.979 - 47.978 (1.8889 - 1.8889)
	Grade No. B	47.978 - 47.977 (1.8889 - 1.8889)
	Grade No. C	47.977 - 47.976 (1.8889 - 1.8888)
	Grade No. D	47.976 - 47.975 (1.8888 - 1.8888)
	Grade No. E	47.975 - 47.974 (1.8888 - 1.8887)
	Grade No. F	47.974 - 47.973 (1.8887 - 1.8887)
	Grade No. G	47.973 - 47.972 (1.8887 - 1.8887)
	Grade No. H	47.972 - 47.971 (1.8887 - 1.8886)
	Grade No. J	47.971 - 47.970 (1.8886 - 1.8886)
	Grade No. K	47.970 - 47.969 (1.8886 - 1.8885)
	Grade No. L	47.969 - 47.968 (1.8885 - 1.8885)
	Grade No. M	47.968 - 47.967 (1.8885 - 1.8885)
	Grade No. N	47.967 - 47.966 (1.8885 - 1.8884)
	Grade No. P	47.966 - 47.965 (1.8884 - 1.8884)
	Grade No. R	47.995 - 47.964 (1.8884 - 1.8883)
	Grade No. S	47.994 - 47.963 (1.8883 - 1.8883)
	Grade No. T	47.963 - 47.962 (1.8883 - 1.8883)
	Grade No. U	47.962 - 47.961 (1.8883 - 1.8882)
	Grade No. V	47.961 - 47.960 (1.8882 - 1.8882)
	Grade No. W	47.960 - 47.959 (1.8882 - 1.8881)

*: Total indicator reading

Connecting Rod Bearing

INFOID:0000000000893906

CONNECTING ROD BEARING GRADE TABLE

Unit: mm (in)

Grade number		Thickness	Identification color	Remarks
0		1.498 - 1.501 (0.0590 - 0.0591)	Black	Grade and color are the same for upper and lower bearings.
1		1.501 - 1.504 (0.0591 - 0.0592)	Brown	
2		1.504 - 1.507 (0.0592 - 0.0593)	Green	
3		1.507 - 1.510 (0.0593 - 0.0594)	Yellow	
4		1.510 - 1.513 (0.0594 - 0.0596)	Blue	
01	UPR	1.498 - 1.501 (0.0590 - 0.0591)	Black	Grade and color are different for upper and lower bearings.
	LWR	1.501 - 1.504 (0.0591 - 0.0592)	Brown	
12	UPR	1.501 - 1.504 (0.0591 - 0.0592)	Brown	
	LWR	1.504 - 1.507 (0.0592 - 0.0593)	Green	
23	UPR	1.504 - 1.507 (0.0592 - 0.0593)	Green	
	LWR	1.507 - 1.510 (0.0593 - 0.0594)	Yellow	
34	UPR	1.507 - 1.510 (0.0593 - 0.0594)	Yellow	
	LWR	1.510 - 1.513 (0.0594 - 0.0596)	Blue	

cardiagn.com

UNDERSIZE TABLE

Unit: mm (in)

Item	Thickness	Crankshaft pin journal diameter
US 0.25 (0.0098)	1.627 - 1.635 (0.0641 - 0.0644)	Grind so that bearing clearance is the specified value.

CONNECTING ROD BEARING OIL CLEARANCE

Unit: mm (in)

Connecting rod bearing oil clearance	Standard	0.029 - 0.039 (0.0011 - 0.0015)
	Limit	0.10 (0.0039)

Main Bearing

INFOID:0000000000893905

MAIN BEARING GRADE TABLE

Unit: mm (in)

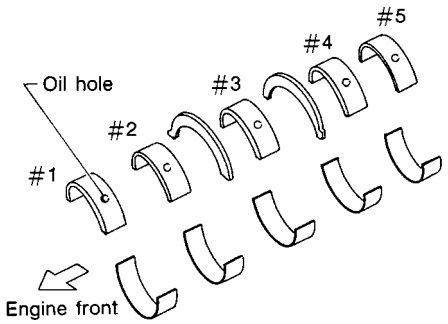

SEM685D

Grade number		Thickness	Identification color	Remarks
0		1.996 - 1.999 (0.0786 - 0.0787)	Black	Grade and color are the same for upper and lower bearings.
1		1.999 - 2.002 (0.0787 - 0.0788)	Brown	
2		2.002 - 2.005 (0.0788 - 0.0789)	Green	
3		2.005 - 2.008 (0.0789 - 0.0791)	Yellow	
4		2.008 - 2.011 (0.0791 - 0.0792)	Blue	
5		2.011 - 2.014 (0.0792 - 0.0793)	Pink	
01	UPR	1.996 - 1.999 (0.0786 - 0.0787)	Black	Grade and color are different for upper and lower bearings.
	LWR	1.999 - 2.002 (0.0787 - 0.0788)	Brown	
12	UPR	1.999 - 2.002 (0.0787 - 0.0788)	Brown	
	LWR	2.002 - 2.005 (0.0788 - 0.0789)	Green	
23	UPR	2.002 - 2.005 (0.0788 - 0.0789)	Green	
	LWR	2.005 - 2.008 (0.0789 - 0.0791)	Yellow	
34	UPR	2.005 - 2.008 (0.0789 - 0.0791)	Yellow	
	LWR	2.008 - 2.011 (0.0791 - 0.0792)	Blue	
45	UPR	2.008 - 2.011 (0.0791 - 0.0792)	Blue	
	LWR	2.011 - 2.014 (0.0792 - 0.0793)	Pink	

UNDERSIZE TABLE

Unit: mm (in)

Items	Thickness	Main journal diameter
0.25 (0.0098)	2.126 - 2.134 (0.0837 - 0.0840)	Grind so that bearing clearance is the specified value.

MAIN BEARING OIL CLEARANCE

Unit: mm (in)

Main bearing oil clearance	Standard	0.024 - 0.034 (0.0009 - 0.0013)

cardiagn.com

SYMPTOM DIAGNOSIS

NOISE, VIBRATION AND HARSHNESS (NVH) TROUBLESHOOTING

NVH troubleshooting Chart

INFOID:0000000000893919

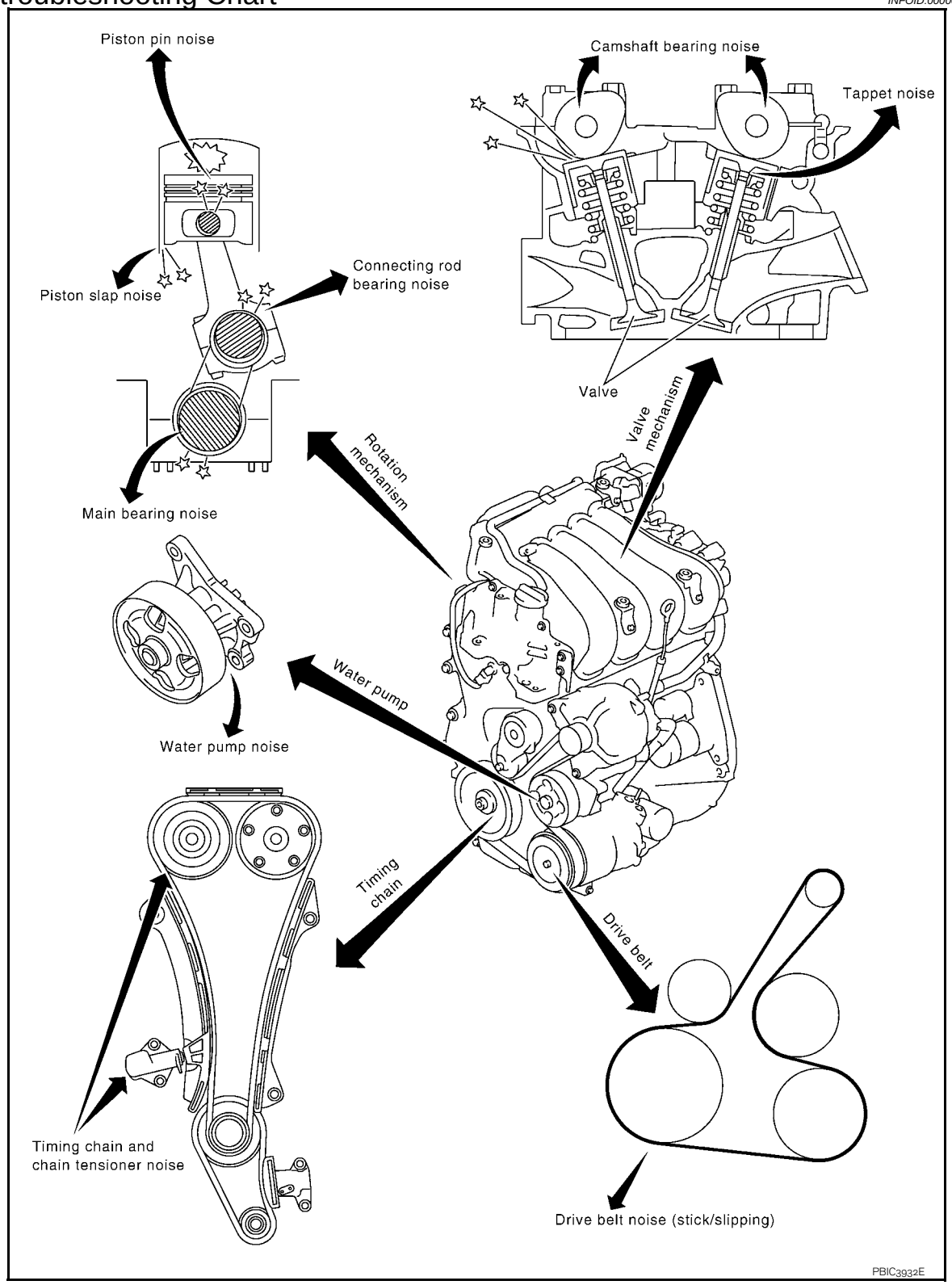

1. Locate the area where noise occurs.
2. Confirm the type of noise.
3. Specify the operating condition of engine.
4. Check specified noise source.

cardiagn.com

If necessary, repair or replace these parts.

Location of noise	Type of noise	Operating condition of engine						Source of noise	Check item	Reference page
		Before warm-up	After warm-up	When starting	When idling	When racing	While driving			
Top of engine Rocker cover Cylinder head	Ticking or clicking	C	A	—	A	B	—	Tappet noise	Valve clearance	EM-139
	Rattle	C	A	—	A	B	C	Camshaft bearing noise	Camshaft journal oil clearance Camshaft runout	EM-237 EM-237
Crankshaft pulley Cylinder block (Side of engine) Oil pan	Slap or knock	—	A	—	B	B	—	Piston pin noise	Piston to piston pin oil clearance Connecting rod bushing oil clearance	EM-241 EM-241
	Slap or rap	A	—	—	B	B	A	Piston slap noise	Piston to cylinder bore clearance Piston ring side clearance Piston ring end gap Connecting rod bend and torsion	EM-241 EM-241 EM-241 EM-241
	Knock	A	B	C	B	B	B	Connecting rod bearing noise	Connecting rod bushing oil clearance Connecting rod bearing oil clearance	EM-241 EM-244
	Knock	A	B	—	A	B	C	Main bearing noise	Main bearing oil clearance Crankshaft runout	EM-245 EM-245
Front of engine Front cover	Tapping or ticking	A	A	—	B	B	B	Timing chain and chain tensioner noise	Timing chain cracks and wear Timing chain tensioner operation	EM-171 EM-163
Front of engine	Squeaking or fizzing	A	B	—	B	—	C	Drive belt (Sticking or slipping)	Drive belt deflection	EM-134
	Creaking	A	B	A	B	A	B	Drive belt (Slipping)	Idler pulley bearing operation	
	Squall Creak	A	B	—	B	A	B	Water pump noise	Water pump operation	CO-39

A: Closely related B: Related C: Sometimes related —: Not related

cardiagn.com

PRECAUTION

PRECAUTIONS

Precaution for Procedure without Cowl Top Cover

INFOID:0000000001117288

When performing the procedure after removing cowl top cover, cover the lower end of windshield with urethane, etc.

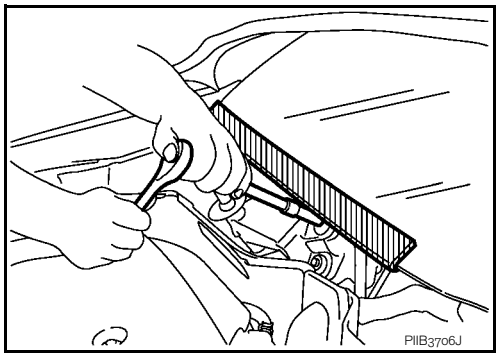

Precaution Necessary for Steering Wheel Rotation After Battery Disconnect

INFOID:0000000001117287

NOTE:
- This Procedure is applied only to models with Intelligent Key system and NATS (NISSAN ANTI-THEFT SYSTEM).
- Remove and install all control units after disconnecting both battery cables with the ignition knob in the ″LOCK″ position.
- Always use CONSULT-III to perform self-diagnosis as a part of each function inspection after finishing work. If DTC is detected, perform trouble diagnosis according to self-diagnostic results.

For models equipped with the Intelligent Key system and NATS, an electrically controlled steering lock mechanism is adopted on the key cylinder.
For this reason, if the battery is disconnected or if the battery is discharged, the steering wheel will lock and steering wheel rotation will become impossible.
If steering wheel rotation is required when battery power is interrupted, follow the procedure below before starting the repair operation.

OPERATION PROCEDURE

1. Connect both battery cables.
   NOTE:
   Supply power using jumper cables if battery is discharged.
2. Use the Intelligent Key or mechanical key to turn the ignition switch to the ″ACC″ position. At this time, the steering lock will be released.
3. Disconnect both battery cables. The steering lock will remain released and the steering wheel can be rotated.
4. Perform the necessary repair operation.
5. When the repair work is completed, return the ignition switch to the ″LOCK″ position before connecting the battery cables. (At this time, the steering lock mechanism will engage.)
6. Perform a self-diagnosis check of all control units using CONSULT-III.

Draining Engine Coolant

INFOID:0000000000893910

Drain engine coolant and engine oil when the engine is cooled.

Disconnecting Fuel Piping

INFOID:0000000000893911

- Before starting work, make sure no fire or spark producing items are in the work area.
- Release fuel pressure before disconnecting and disassembly.
- After disconnecting pipes, plug openings to stop fuel leakage.

Removal and Disassembly

INFOID:0000000000893912

cardiagn.com

- When instructed to use SST, use specified tools. Always be careful to work safely, avoid forceful or uninstructed operations.
- Exercise maximum care to avoid damage to mating or sliding surfaces.
- Dowel pins are used for several parts alignment. When replacing and reassembling parts with dowel pins, make sure that dowel pins are installed in the original position.
- Cover openings of engine system with a tape or equivalent, if necessary, to seal out foreign materials.
- Mark and arrange disassembly parts in an organized way for easy troubleshooting and re-assembly.
- When loosening nuts and bolts, as a basic rule, start with the one furthest outside, then the one diagonally opposite, and so on. If the order of loosening is specified, do exactly as specified. Power tools may be used in the step.

Inspection, Repair and Replacement

INFOID:0000000000893913

Before repairing or replacing, thoroughly inspect parts. Inspect new replacement parts in the same way, and replace if necessary.

Assembly and Installation

INFOID:0000000000893914

- Use torque wrench to tighten bolts or nuts to specification.
- When tightening nuts and bolts, as a basic rule, equally tighten in several different steps starting with the ones in center, then ones on inside and outside diagonally in this order. If the order of tightening is specified, do exactly as specified.
- Replace with new gasket, packing, oil seal or O-ring.
- Thoroughly wash, clean, and air-blow each part. Carefully check engine oil or engine coolant passages for any restriction and blockage.
- Avoid damaging sliding or mating surfaces. Completely remove foreign materials such as cloth lint or dust. Before assembly, oil sliding surfaces well.
- Release air within route when refilling after draining engine coolant.
- After repairing, start the engine and increase engine speed to check engine coolant, fuel, engine oil, and exhaust gases for leakage.

Parts Requiring Angle Tightening

INFOID:0000000000893915

- Use the angle wrench [SST: KV10112100] for the final tightening of the following engine parts:
- Camshaft sprocket (INT) bolt
- Cylinder head bolts
- Main bearing cap bolts
- Connecting rod cap bolts
- Crankshaft pulley bolt (No the angle wrench is required as bolt flange is provided with notches for angle tightening)
- Do not use a torque value for final tightening.
- The torque value for these parts are for a preliminary step.
- Ensure thread and seat surfaces are clean and coated with engine oil.

Liquid Gasket

INFOID:0000000000893916

REMOVAL OF LIQUID GASKET SEALING

- After removing mounting nuts and bolts, separate the mating surface using the seal cutter (SST) and remove old liquid gasket sealing.
  CAUTION:
  Be careful not to damage the mating surfaces.
- Tap the seal cutter to insert it (1), and then slide it (2) by tapping on the side as shown in the figure.
- In areas where the seal cutter (SST) is difficult to use, use a plastic hammer to lightly tap the parts, to remove it.
  CAUTION:
  If for some unavoidable reason tool such as a screwdriver is used, be careful not to damage the mating surfaces.

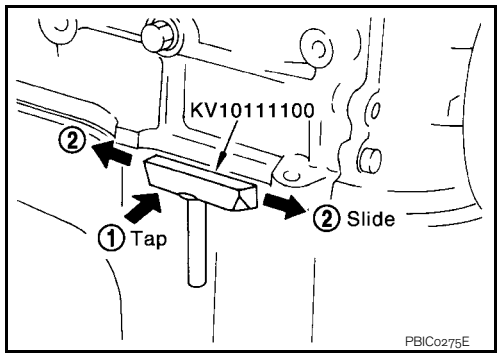

LIQUID GASKET APPLICATION PROCEDURE

cardiagn.com

1. Using a scraper, remove old liquid gasket adhering to the liquid gasket application surface and the mating surface.
   - Remove liquid gasket completely from the groove of the liquid gasket application surface, mounting bolts, and bolt holes.
2. Wipe the liquid gasket application surface and the mating surface with white gasoline (lighting and heating use) to remove adhering moisture, grease and foreign materials.

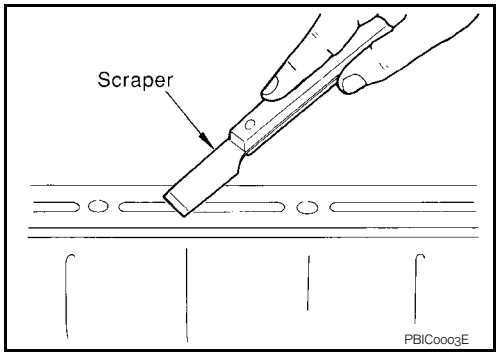

3. Attach liquid gasket tube to the tube presser (commercial service tool).
   Use Genuine Liquid Gasket or equivalent.
4. Apply liquid gasket without breaks to the specified location with the specified dimensions.
   - If there is a groove for liquid gasket application, apply liquid gasket to the groove.

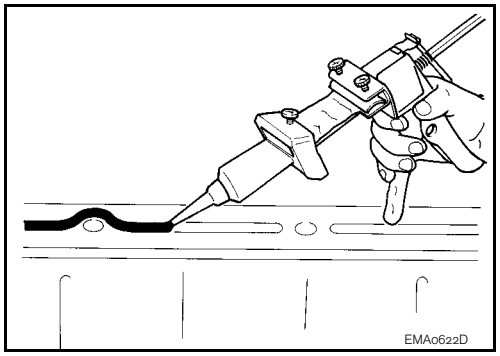

   - As for bolt holes, normally apply liquid gasket inside the holes. Occasionally, it should be applied outside the holes. Make sure to read the text of this manual.
   - Within five minutes of liquid gasket application, install the mating component.
   - If liquid gasket protrudes, wipe it off immediately.
   - Do not retighten mounting bolts or nuts after the installation.
   - After 30 minutes or more have passed from the installation, fill engine oil and engine coolant.

   CAUTION:
   If there are specific instructions in this manual, observe them.

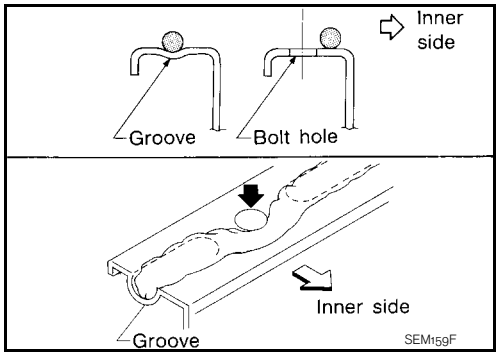

cardiagn.com

PREPARATION

PREPARATION

Special Service Tools

INFOID:0000000000893917

Tool number Tool name		Description
KV10111100 Seal cutter	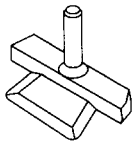 S-NT046	Removing oil pan (upper and lower) etc.
KV10116200 Valve spring compressor 1. KV10115900 Attachment 2. KV10109220 Adapter	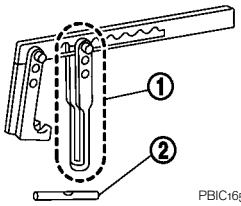 PBIC1650E	Disassembling and assembling valve mechanism Part (1) is a component of KV10116200, but Part (2) is not so.
KV10112100 Angle wrench	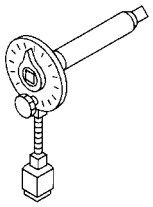 S-NT014	Tightening bolts for main bearing cap, cylinder head, etc.
KV10117100 Heated oxygen sensor wrench	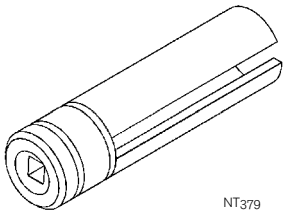 NT379	Loosening or tightening heated oxygen sensor 1 **For 22 mm (0.87 in) width hexagon nut**
KV10107902 Valve oil seal puller 1. KV10116100 Valve oil seal puller adapter	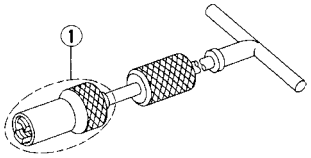 S-NT605	Removing valve oil seal
KV10115600 Valve oil seal drift	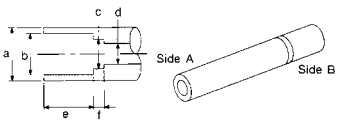 S-NT603	Installing valve oil seal **Use side A.** **a: 20 (0.79) dia.** **d: 8 (0.31) dia.** **b: 13 (0.51) dia.** **e: 10.7 (0.421)** **c: 10.3 (0.406) dia.** **f: 5 (0.20)** Unit: mm (in)

cardiagn.com

Tool number Tool name	Description
EM03470000 Piston ring compressor 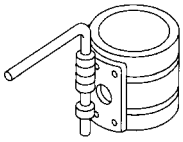 S-NT044	Installing piston assembly into cylinder bore
ST16610001 Pilot bushing puller 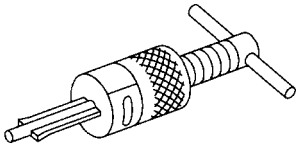 S-NT045	Removing pilot converter (A/T models)
KV11103000 Pulley puller 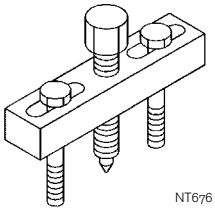 NT676	Removing crankshaft pulley
KV11105210 Stopper plate 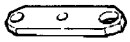 ZZA0009D	Fixing drive plate and flywheel
Quick connector release 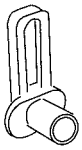 PBIC0198E	Removing fuel tube quick connectors in engine room (Available in SEC. 164 of PARTS CATALOG: Part No. 16441 6N210)

Commercial Service Tools

INFOID:0000000000893918

cardiagn.com

Tool name	Description
Spark plug wrench 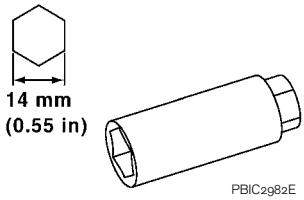	Removing and installing spark plug
Pulley holder	Crankshaft pulley removing and installing
Valve seat cutter set 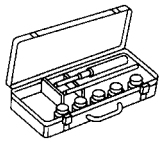	Finishing valve seat dimensions
Piston ring expander 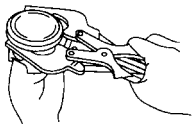	Removing and installing piston ring
Valve guide drift 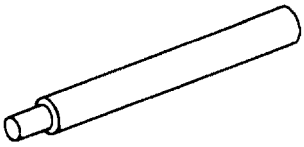	Removing and installing valve guide
Valve guide reamer 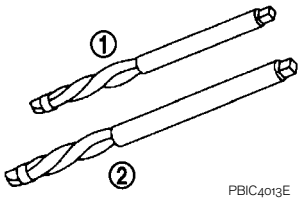	1: Reaming valve guide inner hole 2: Reaming hole for oversize valve guide
Oxygen sensor thread cleaner 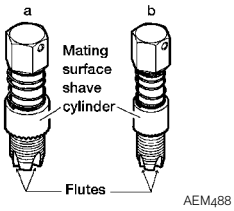	Reconditioning the exhaust system threads before installing a new heated oxygen sensor (Use with anti-seize lubricant shown below.) **a = 18 mm (0.71 in) dia. for zirconia heated oxygen sensor** **b = 12 mm (0.47 in) dia. for titania heated oxygen sensor**

cardiagn.com

Tool name	Description
Anti-seize lubricant (Permatex 133AR or equivalent meeting MIL specification MIL-A-907) 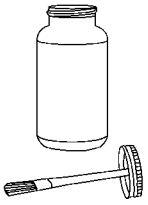 AEM489	Lubricating oxygen sensor thread cleaning tool when reconditioning exhaust system threads
Manual lift table caddy 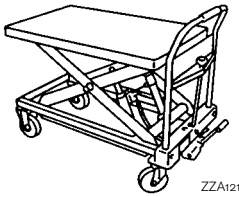 ZZA1210D	Removing and installing engine
Tube presser 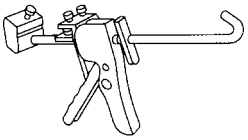 S-NT052	Pressing the tube of liquid gasket

cardiagn.com

ON-VEHICLE MAINTENANCE

DRIVE BELTS

Exploded View

INFOID:0000000000895581

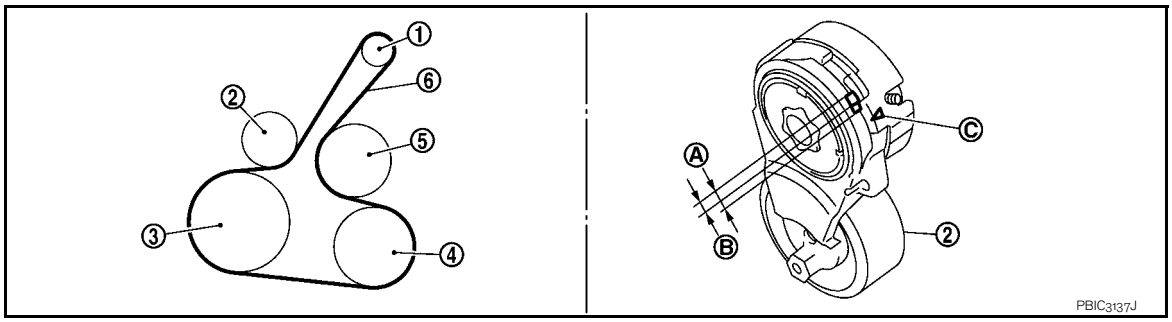

1.	Alternator	2.	Drive belt auto-tensioner	3.	Crankshaft pulley
4.	A/C compressor (with A/C models) Idler pulley (without A/C models)	5.	Water pump	6.	Drive belt
A.	Possible use range	B.	Range when new drive belt is installed	C.	Indicator

Checking

INFOID:0000000000895582

WARNING:
Perform this step when engine is stopped.

- Make sure that the indicator (notch on fixed side) of drive belt auto-tensioner is within the possible use range (A) in the figure.
  NOTE:
  - Check the drive belt auto-tensioner indication when the engine is cold.
  - When new drive belt is installed, the indicator (notch on fixed side) should be within the range (B) in the figure.
- Visually check entire drive belt for wear, damage or cracks.
- If the indicator (notch on fixed side) is out of the possible use range or belt is damaged, replace drive belt.

Tension Adjustment

INFOID:0000000000895583

Refer to : EM-236, "Drive Belt".

Belt tension is not necessary, as it is automatically adjusted by drive belt auto-tensioner.

Removal and Installation

INFOID:0000000000893920

REMOVAL

1. Hold the hexagonal part (A) of drive belt auto-tensioner (1) with a wrench securely. Then move the wrench handle in the direction of arrow (loosening direction of tensioner).
   CAUTION:
   Avoid placing hand in a location where pinching may occur if the holding tool accidentally comes off.
2. Insert a rod approximately 6 mm (0.24 in) in diameter such as short-length screwdriver into the hole (B) of the retaining boss to fix drive belt auto-tensioner.
   - Keep drive belt auto-tensioner pulley arm locked after drive belt is removed.
3. Remove drive belt.

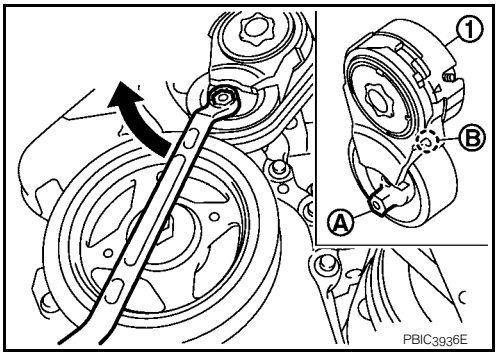

INSTALLATION

cardiagn.com

1. Install drive belt.
   CAUTION:
   - **Confirm drive belt is completely set to pulleys.**
   - **Check for engine oil, working fluid and engine coolant are not adhered to drive belt and each pulley groove.**
2. Release drive belt auto-tensioner, and apply tension to drive belt.
3. Turn crankshaft pulley clockwise several times to equalize tension between each pulley.
4. Confirm tension of drive belt at indicator (notch on fixed side) is within the possible use range. Refer to EM-134, "Exploded View".

cardiagn.com

AIR CLEANER FILTER

Removal and Installation

INFOID:0000000000893922

REMOVAL

1. Unhook clips (A) and remove holder (2) from air cleaner case (1).

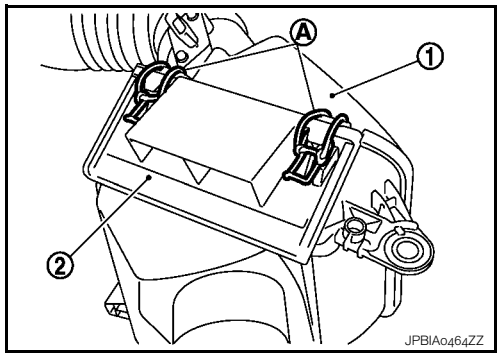

2. Remove air cleaner filter (1) from air cleaner case (2).

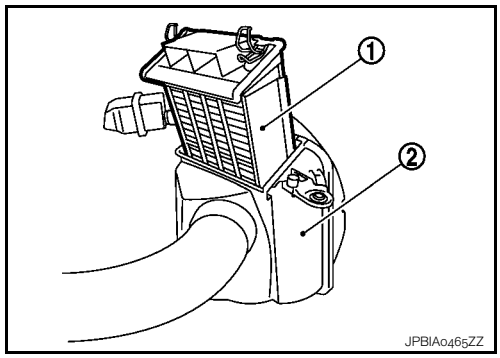

INSTALLATION

Note the following, and install in the reverse order of removal.

- Install the air cleaner filter by aligning the seal with the notch of air cleaner case.

cardiagn.com

SPARK PLUG

Exploded View

INFOID:0000000000893923

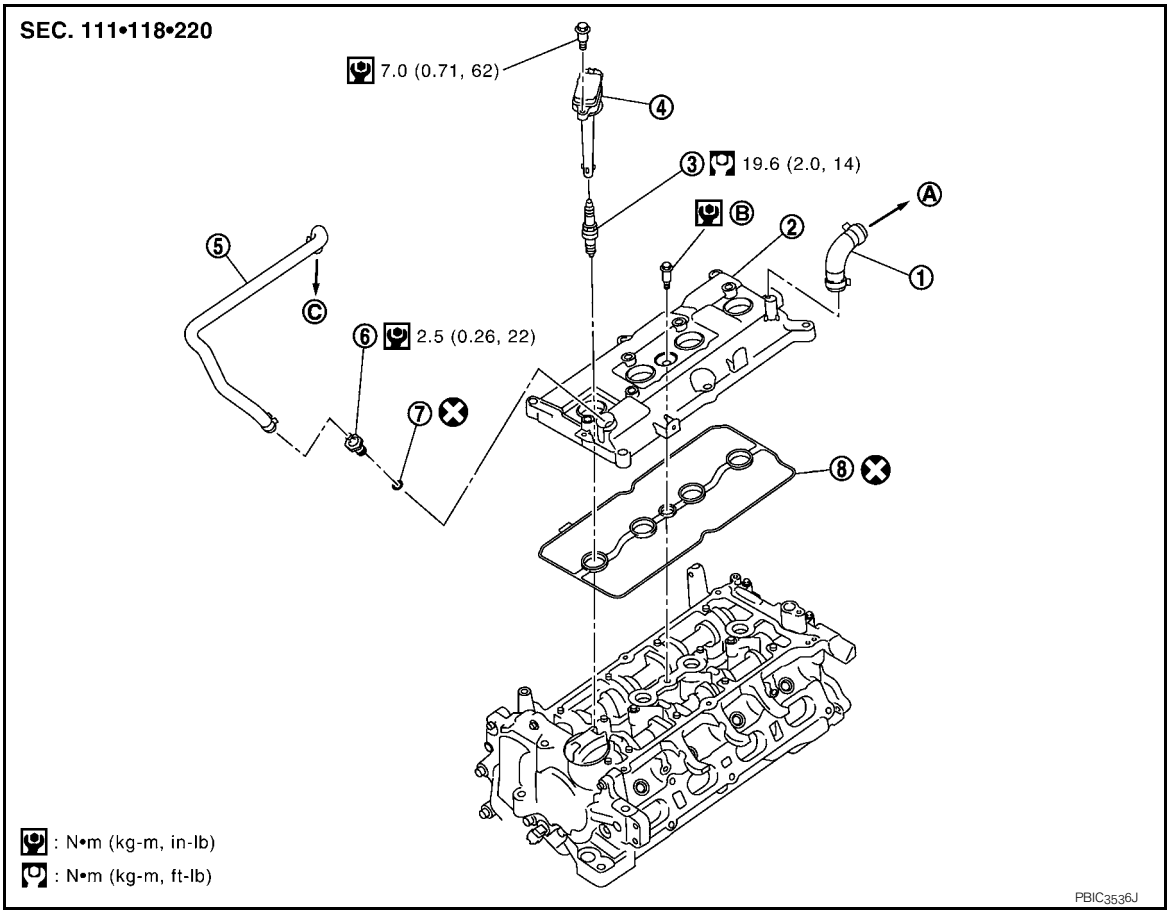

1. PCV hose	2. Rocker cover	3. Spark plug
4. Ignition coil	5. PCV hose	6. PCV valve
7. O-ring	8. Gasket	
A. To air duct	B. Refer to EM-160	C. To intake manifold

Refer to GI-4, "Components" for symbols in the figure.

Removal and Installation

INFOID:0000000000893924

REMOVAL

1. Remove ignition coil. Refer to EM-160, "Exploded View".
2. Remove spark plug with a spark plug wrench (commercial service tool).

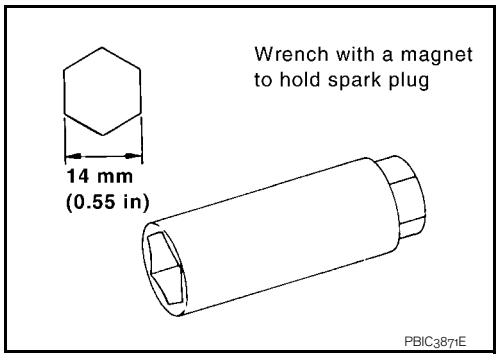

INSTALLATION

cardiagn.com

Installation is the reverse order of removal.

Inspection

INFOID:0000000000893925

INSPECTION AFTER REMOVAL

Use the standard type spark plug for normal condition.

Spark plug (standard) : Refer to EM-236, "Spark Plug".

CAUTION:

- **Never drop or shock spark plug.**
- **Never use a wire brush for cleaning.**
- **If plug tip is covered with carbon, spark plug cleaner may be used.**

Cleaner air pressure:

Less than 588 kPa (6 kg/cm^2, 85 psi)

Cleaning time:

Less than 20 seconds

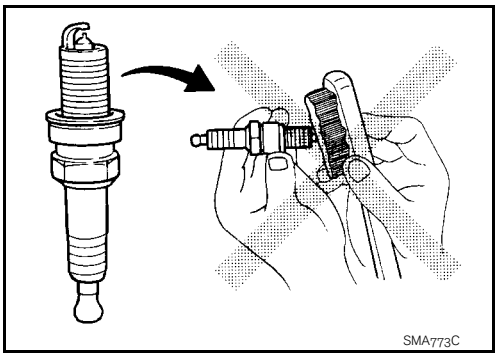

- **Checking and adjusting plug gap is not required between change intervals.**

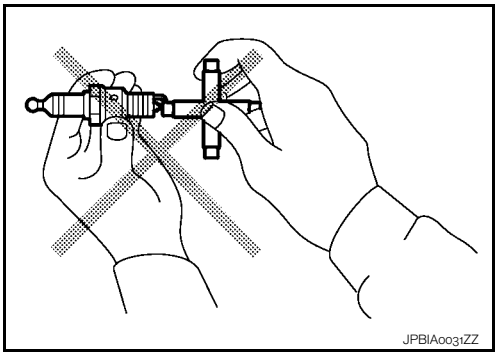

cardiagn.com

CAMSHAFT VALVE CLEARANCE

Inspection and Adjustment

INFOID:0000000000893926

INSPECTION

Perform inspection as follows after removal, installation or replacement of camshaft or valve-related parts, or if there is unusual engine conditions regarding valve clearance.

1. Remove rocker cover. Refer to EM-160, "Exploded View".
2. Measure the valve clearance with the following procedure:

a. Set No. 1 cylinder at TDC of its compression stroke.

- Rotate crankshaft pulley (1) clockwise and align TDC mark (no paint) (B) to timing indicator (A) on front cover.

C : White paint mark (Not use for service)

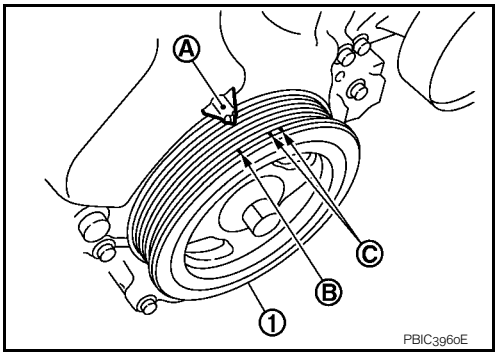

- At the same time, make sure that both intake and exhaust cam noses of No. 1 cylinder face inside (⬅) as shown in the figure.

1 : Camshaft (INT)
2 : Camshaft (EXH)
⇦ : Engine front

- If they do not face inside, rotate crankshaft pulley once more (360 degrees) and align as shown in the figure.

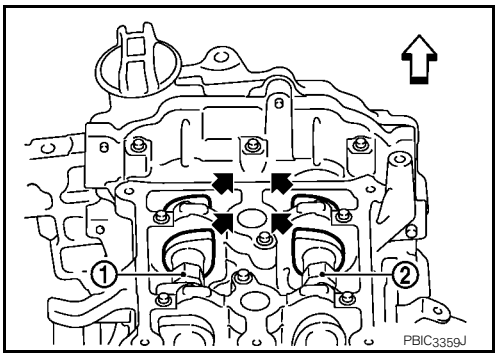

b. Use a feeler gauge, measure the clearance between valve lifter and camshaft.

Valve clearance : Refer to EM-237, "Camshaft".

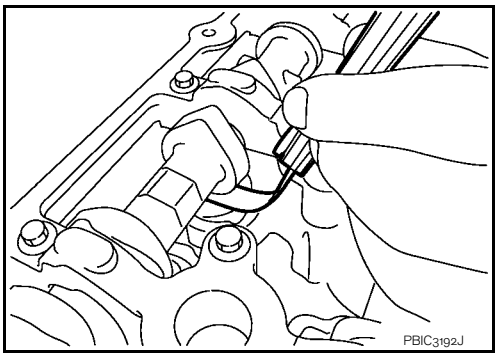

- By referring to the figure, measure the valve clearances at locations marked "×" as shown in the table below [locations indicated with black arrow (⬅) in the figure] with a feeler gauge.

A : Exhaust side
B : No.1 cylinder
C : No.2 cylinder
D : No.3 cylinder
E : No.4 cylinder

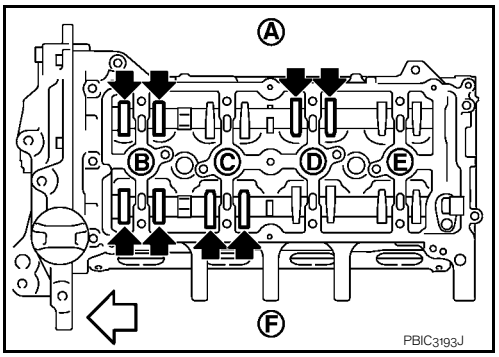

cardiagn.com

F : Intake side

⇦ : Engine front

Measuring position		No. 1 CYL.	No. 2 CYL.	No. 3 CYL.	No. 4 CYL.
No. 1 cylinder at compression TDC	EXH	×		×	
	INT	×	×		

c. Set No.4 cylinder at TDC of its compression stroke.
   - Rotate crankshaft pulley (1) one revolution (360 degrees) and align TDC mark (no paint) (B) to timing indicator (A) on front cover.

     C : White paint mark (Not use for service)

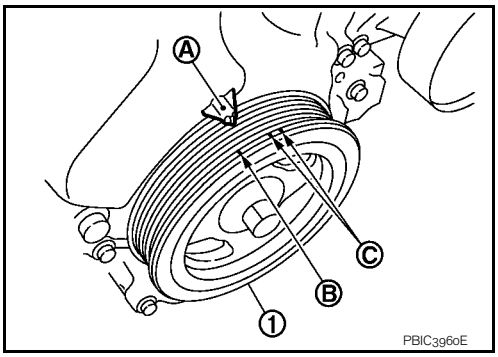

   - By referring to the figure, measure the valve clearance at locations marked "×" as shown in the table below [locations indicated with black arrow (⬅) in the figure] with a feeler gauge.

     A : Exhaust side
     B : No.1 cylinder
     C : No.2 cylinder
     D : No.3 cylinder
     E : No.4 cylinder
     F : Intake side
     ⇦ : Engine front

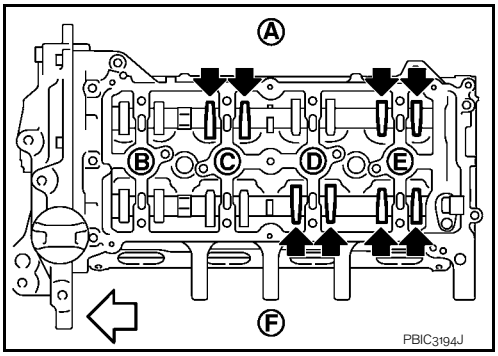

Measuring position		No. 1 CYL.	No. 2 CYL.	No. 3 CYL.	No. 4 CYL.
No. 4 cylinder at compression TDC	EXH		×		×
	INT			×	×

3. If out of standard, perform adjustment. Refer to "ADJUSTMENT".

ADJUSTMENT

- Perform adjustment depending on selected head thickness of valve lifter.

1. Remove camshaft. Refer to EM-173, "Exploded View".
2. Remove valve lifters at the locations that are out of the standard.
3. Measure the center thickness of the removed valve lifters with a micrometer (A).

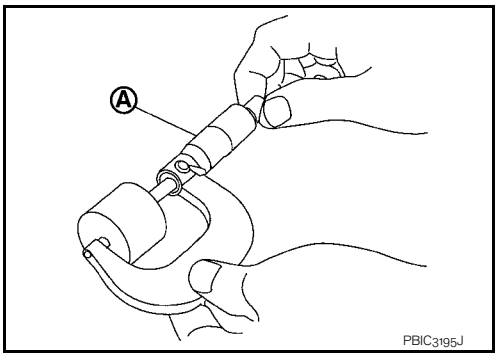

4. Use the equation below to calculate valve lifter thickness for replacement.

cardiagn.com

Valve lifter thickness calculation: $t = t_1 + (C_1 - C_2)$

t = Valve lifter thickness to be replaced

t_1 = Removed valve lifter thickness

C_1 = Measured valve clearance

C_2 = Standard valve clearance:

Intake : 0.30 mm (0.012 in)

Exhaust : 0.33 mm (0.013 in)

- Thickness of new valve lifter (B) can be identified by stamp mark (A) on the reverse side (inside the cylinder).
- Stamp mark “302” indicates 3.02 mm (0.118 in) in thickness.

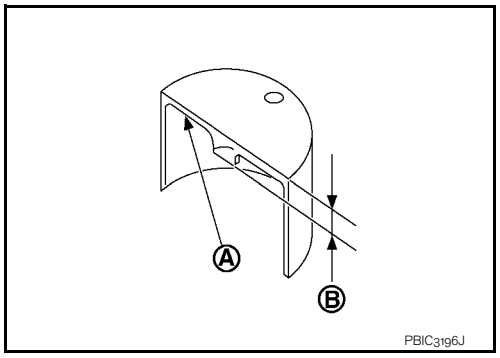

NOTE:
Available thickness of valve lifter: 26 sizes range 3.00 to 3.50 mm (0.1181 to 0.1378 in) in steps of 0.02 mm (0.0008 in) (when manufactured at factory). Refer to EM-237, "Camshaft".

5. Install the selected valve lifter.
6. Install camshaft. Refer to EM-173, "Exploded View".
7. Install timing chain and related parts. Refer to EM-162, "Exploded View".
8. Manually rotate crankshaft pulley a few rotations.
9. Make sure that the valve clearances is within the standard. Refer to “INSPECTION”.
10. Install remaining parts in the reverse order of removal.
11. Warm up the engine, and check for unusual noise and vibration.

cardiagn.com

COMPRESSION PRESSURE

Inspection

INFOID:0000000000893927

1. Warm up engine thoroughly. Then, stop it.
2. Release fuel pressure. Refer to EC-357, "Inspection".
3. Remove ignition coil and spark plug from each cylinder. Refer to EM-160, "Exploded View".
4. Connect engine tachometer (not required in use of CONSULT-III).
5. Install compression gauge (B) with an adapter (A) (commercial service tool) onto spark plug hole.

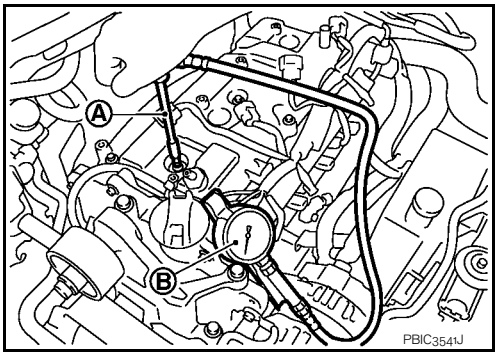

- Use the adapter whose picking up end inserted to spark plug hole is smaller than 20 mm (0.79 in) in diameter. Otherwise, it may be caught by cylinder head during removal.

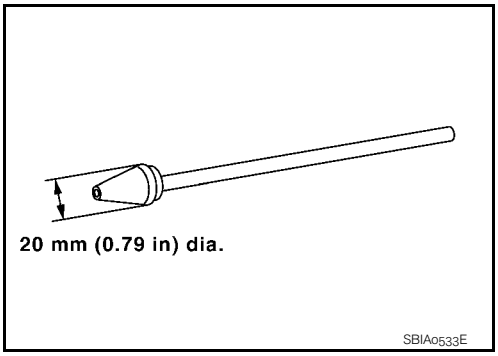

6. With accelerator pedal fully depressed, turn ignition switch to “START” for cranking. When the gauge pointer stabilizes, read the compression pressure and the engine rpm. Perform these steps to check each cylinder.

Compression pressure : Refer to EM-236, "General Specification".

CAUTION:
Always use a fully changed battery to obtain the specified engine speed.
- If the engine speed is out of the specified range, check battery liquid for proper gravity. Check the engine speed again with normal battery gravity.
- If compression pressure is below minimum value, check valve clearances and parts associated with combustion chamber (valve, valve seat, piston, piston ring, cylinder bore, cylinder head, cylinder head gasket). After the checking, measure compression pressure again.
- If some cylinder has low compression pressure, pour small amount of engine oil into the spark plug hole of the cylinder to re-check it for compression.
  - If the added engine oil improves the compression, piston rings may be worn out or damaged. Check piston rings and replace if necessary.
  - If the compression pressure remains at low level despite the addition of engine oil, valves may be malfunctioning. Check valves for damage. Replace valve or valve seat accordingly.
- If two adjacent cylinders have respectively low compression pressure and their compression remains low even after the addition of engine oil, cylinder head gaskets are leaking. In such a case, replace cylinder head gaskets.

7. After inspection is completed, install removed parts.
8. Start the engine, and make sure that the engine runs smoothly.
9. Perform trouble diagnosis. If DTC appears, erase it. Refer to EC-109, "Description".

cardiagn.com

ON-VEHICLE REPAIR

DRIVE BELT AUTO-TENSIONER

Exploded View

INFOID:0000000000902357

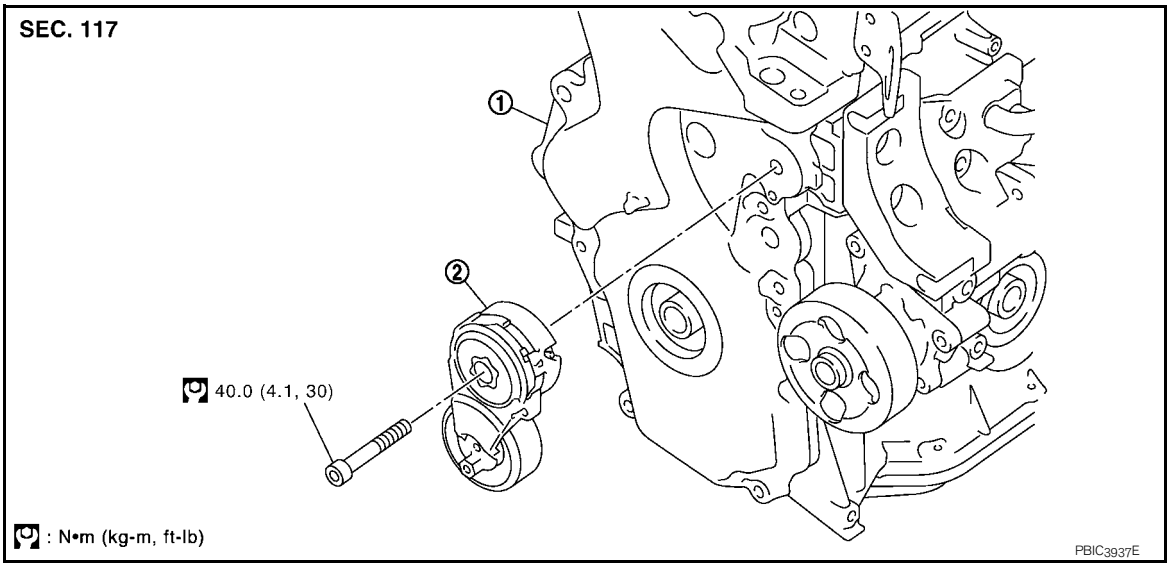

1. Front cover
2. Drive belt auto-tensioner

Removal and Installation

INFOID:0000000000902358

Removal

1. Remove drive belt. Refer to EM-134, "Exploded View".
   - Keep drive belt auto-tensioner pulley arm locked after drive belt is removed.
2. Remove front fender protector (RH). Refer to STR-31, "Starter Motor".
3. Support the bottom surface of engine using a transmission jack, and then remove the engine mounting stay and the engine mounting insulator (RH). Refer to EM-194, "M/T : Exploded View" (M/T models) or EM-198, "CVT : Exploded View" (CVT models).
4. Loosen mounting bolt and remove drive belt auto-tensioner.
   - Lift the front side of the engine with a jack sustaining engine base to remove mounting bolt.

   NOTE:
   Use TORX socket (size T50).

Installation

Installation is the reverse order of removal.

CAUTION:

When installing drive belt auto-tensioner, be careful not to interfere with water pump pulley.

cardiagn.com

AIR CLEANER AND AIR DUCT

Exploded View

INFOID:0000000000893928

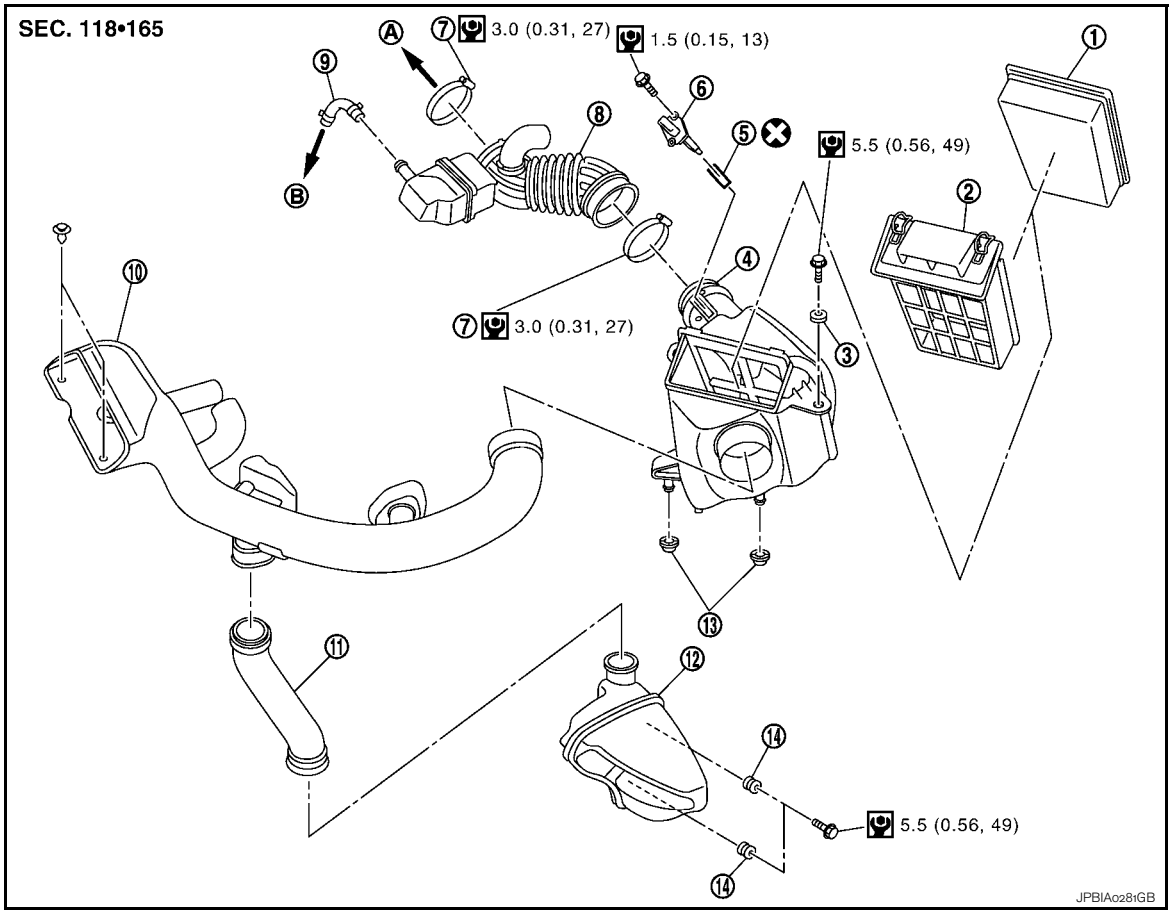

1. Air cleaner filter	2. Holder	3. Grommet
4. Air cleaner case	5. O-ring	6. Mass air flow sensor
7. Clamp	8. Air duct and resonator assembly	9. PCV hose
10. Air duct (inlet)	11. Air duct	12. Resonator
13. Grommet	14. Grommet	
A. To electric throttle control actuator	B. To rocker cover	

Refer to GI-4, "Components" for symbols in the figure.

Removal and Installation

INFOID:0000000000893929

REMOVAL

1. Remove air duct (inlet).
2. Remove engine cover. Refer to EM-146, "Exploded View".
3. Disconnect mass air flow sensor harness connector.
4. Disconnect PCV hose.
5. Remove the battery stay, and then move the battery.
6. Remove air cleaner case/mass air flow sensor assembly and air duct and resonator assembly disconnecting their joints.
   - Add marks as necessary for easier installation.
7. Remove mass air flow sensor from air cleaner case, if necessary.
   CAUTION:
   - **Never shock mass air flow sensor.**

cardiagn.com

- **Never disassemble mass air flow sensor.**

INSTALLATION

Note the following, and install in the reverse order of removal.

- Align marks. Attach each joint. Screw clamps firmly.

Inspection

INFOID:0000000000893930

INSPECTION AFTER REMOVAL

Inspect air duct and resonator assembly for crack or tear.

- If anything found, replace air duct and resonator assembly.

cardiagn.com

INTAKE MANIFOLD

Exploded View

INFOID:0000000000893931

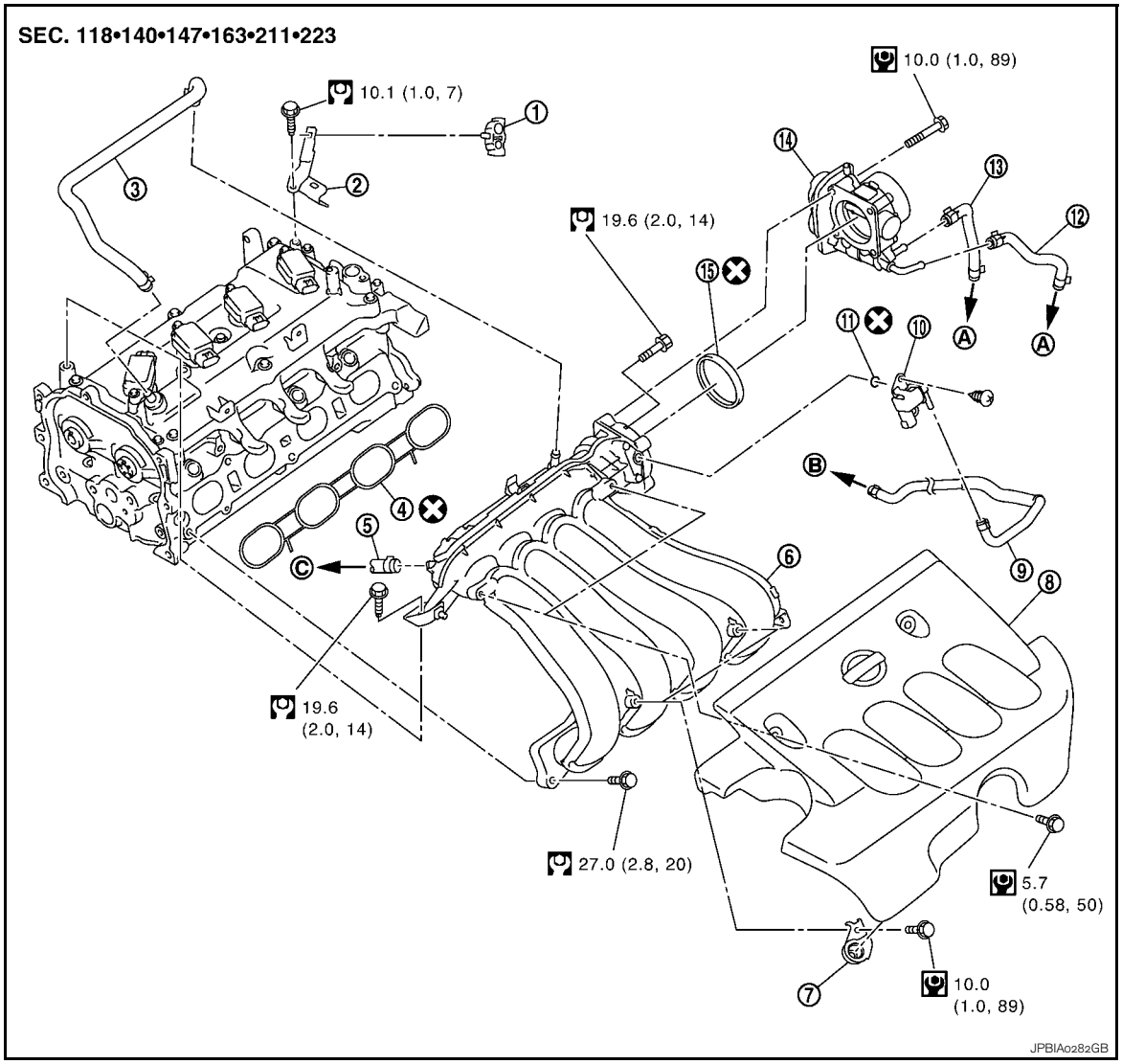

1.	Clamp	2.	Harness bracket	3.	PCV hose
4.	Gasket	5.	Vacuum hose	6.	Intake manifold
7.	Bracket	8.	Engine cover	9.	EVAP hose
10.	EVAP canister purge volume control solenoid valve	11.	O-ring	12.	Water hose
13.	Water hose	14.	Electric throttle control actuator	15.	Gasket
A.	To water outlet	B.	To centralized under-floor piping	C.	To brake booster

Refer to GI-4, "Components" for symbols in the figure.

Removal and Installation

INFOID:0000000000893932

REMOVAL

1. Remove engine cover.
2. Pull out oil level gauge.
   CAUTION:
   Cover the oil level gauge guide openings to avoid entry of foreign materials.
3. Disconnect PCV hose from intake manifold and rocker cover.

cardiagn.com

4. Remove air duct and resonator assembly. Refer to EM-144, "Exploded View".
5. Disconnect vacuum hose from intake manifold. Refer to EM-146, "Exploded View".
6. Disconnect water hoses from electric throttle control actuator, attach blind plug to prevent engine coolant leakage.
   CAUTION:
   - **Perform this step when the engine is cold.**
   - **Never spill engine coolant on drive belts.**
7. Remove electric throttle control actuator.
   CAUTION:
   - **Handle carefully to avoid any shock to electric throttle control actuator.**
   - **Never disassemble electric throttle control actuator.**
8. Remove intake manifold (1) with the following procedure:

a. Loosen and remove intake manifold mounting bolts (A) and (B).

⇦ : Engine front

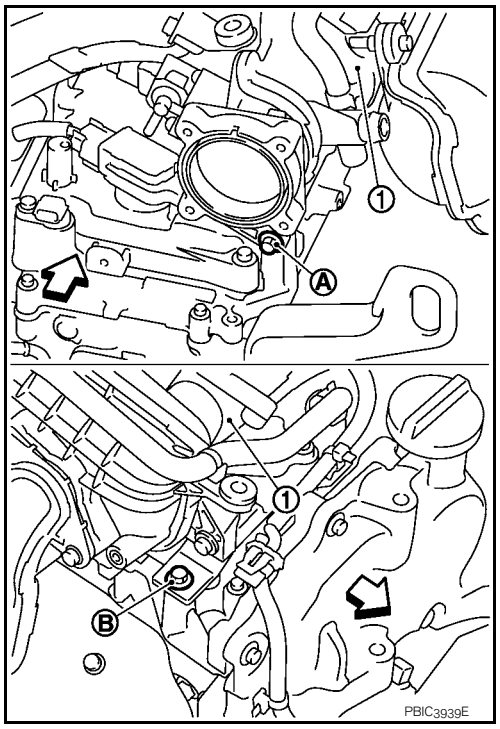

b. Loosen mounting bolts in reverse order as shown in the figure.

⇦ : Engine front

CAUTION:
Cover engine openings to avoid entry of foreign materials.

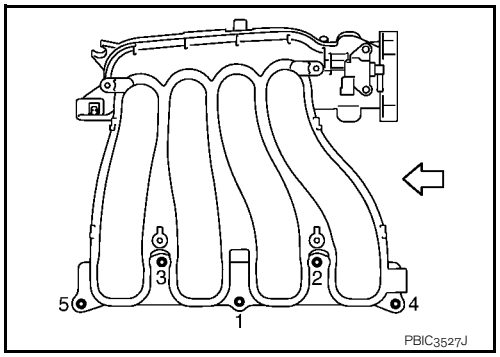

9. Remove brackets from intake manifold, if necessary.
10. Remove EVAP canister purge volume control solenoid valve from intake manifold, if necessary.

INSTALLATION

Note the following, and install in the reverse order of removal.

Intake Manifold

1. Check if gasket is not dropped from the installation groove of intake manifold.
2. Install intake manifold with the following procedure:

cardiagn.com

a. Tighten in numerical order as shown in the figure.

⇦ : Engine front

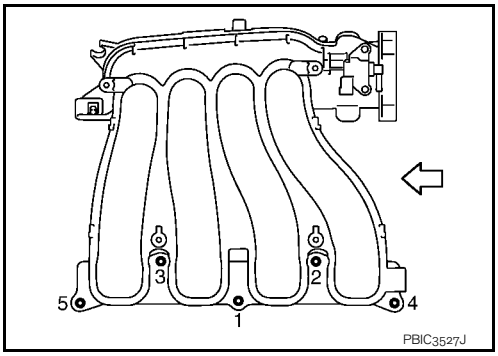

b. Tighten intake manifold (1) mounting bolt (A). Then tighten intake manifold mounting bolt (B).

⇦ : Engine front

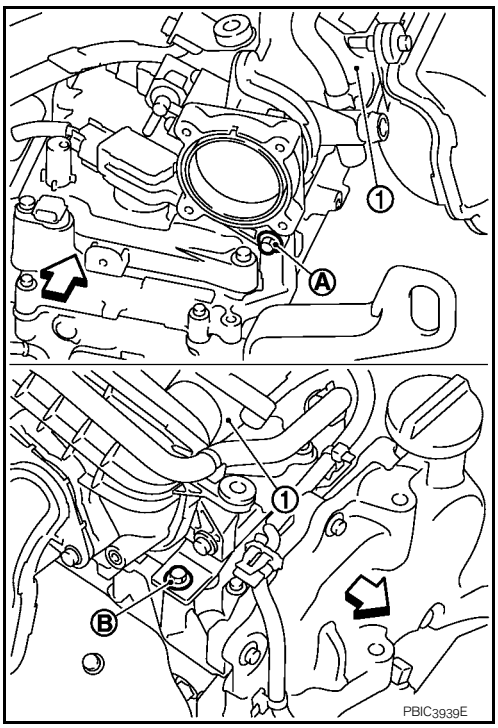

Electric Throttle Control Actuator

- Tighten bolts of electric throttle control actuator equally and diagonally in several steps.
- Perform “Throttle Valve Closed Position Learning” after repair when removing harness connector of the electric throttle control actuator. Refer to EC-647, "THROTTLE VALVE CLOSED POSITION LEARNING : Description".
- Perform “Throttle Valve Closed Position Learning” and “Idle Air Volume Learning” after repair when replacing electric throttle control actuator. Refer to EC-647, "THROTTLE VALVE CLOSED POSITION LEARNING : Description" and EC-647, "IDLE AIR VOLUME LEARNING : Description".

cardiagn.com

EXHAUST MANIFOLD

Exploded View

INFOID:0000000000893934

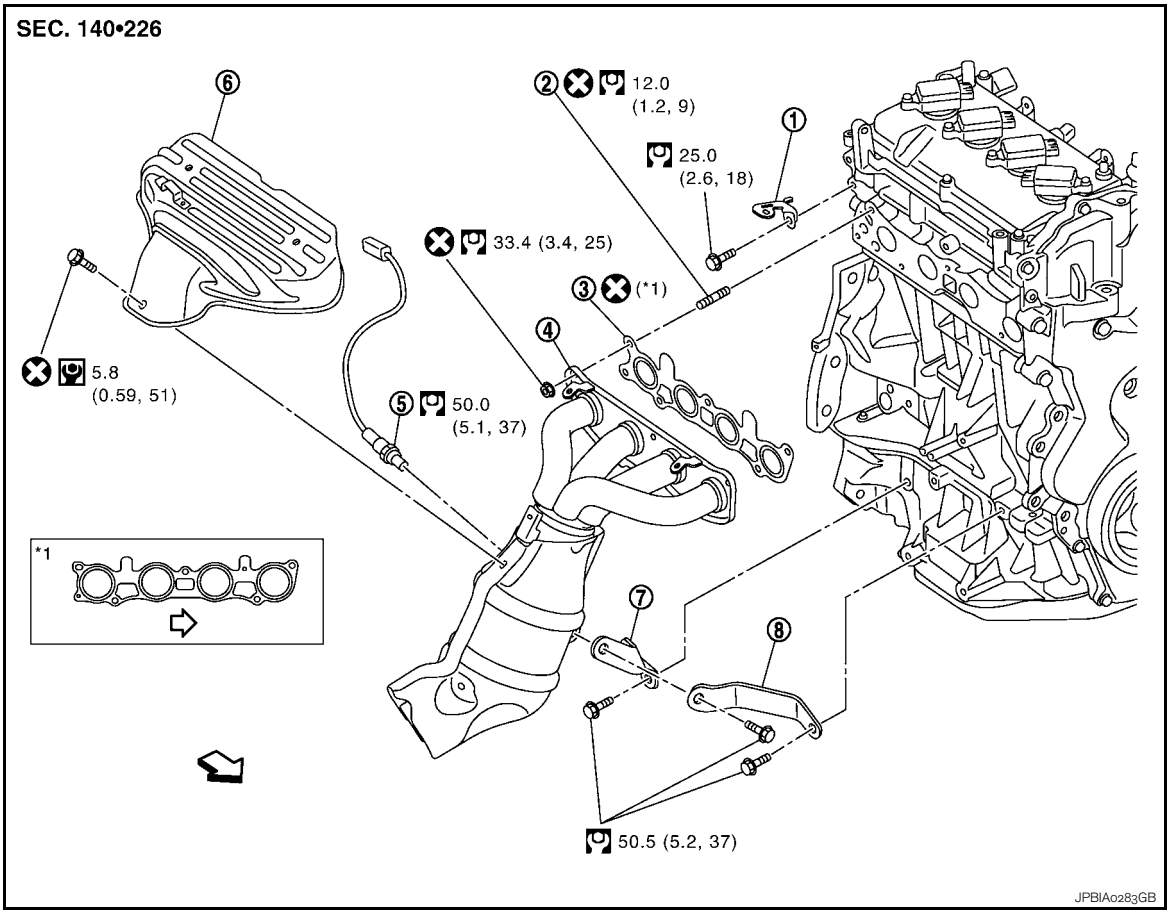

1.	Harness bracket	2.	Stud bolt	3.	Gasket
4.	Exhaust manifold	5.	Heated oxygen sensor 1	6.	Exhaust manifold cover
7.	Exhaust manifold stay (2WD models)	8.	Exhaust manifold stay (4WD models)		

⇦ : Engine front

Refer to GI-4, "Components" for symbols in the figure.

Removal and Installation

INFOID:0000000000893935

REMOVAL

1. Remove exhaust front tube. Refer to EX-10, "Exploded View".
2. Remove exhaust manifold cover.
3. Remove the heated oxygen sensor 1.
   - Using heated oxygen sensor wrench [SST: KV10117100], remove heated oxygen sensor 1.

   CAUTION:
   Handle heated oxygen sensor 1 carefully and avoid impacts.
   NOTE:
   The exhaust manifold can be removed and installed without removing the heated oxygen sensor 1 (Disassembly of harness connector is necessary)
4. Remove drive shaft (RH) and drive shaft support bearing bracket. Refer to EX-10, "Exploded View".
5. Remove exhaust manifold stay.
6. Remove exhaust manifold.

cardiagn.com

- Loosen nuts in reverse order as shown in the figure

⇦ : Engine front

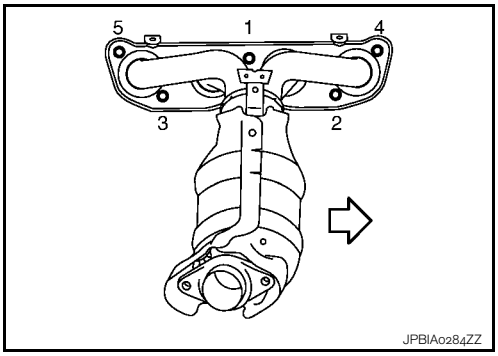

7. Remove gasket.
CAUTION:
Cover engine openings to avoid entry of foreign materials.

INSTALLATION

1. Install gasket to cylinder head as shown in the figure.

⇦ : Engine front

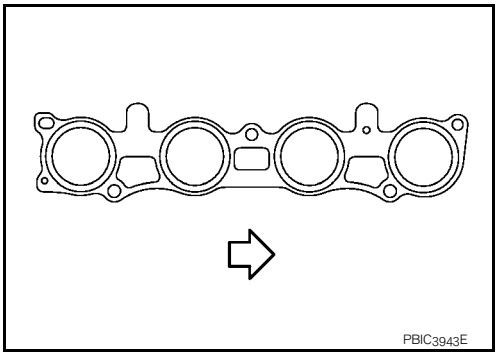

2. Install exhaust manifold with the following procedure:

a. Tighten nuts in numerical order as shown in the figure.

⇦ : Engine front

b. Tighten nuts in numerical order as shown in the figure again.

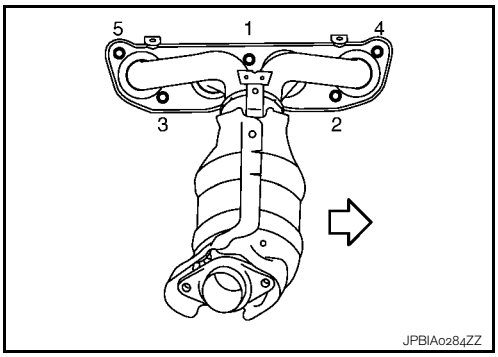

c. Install exhaust manifold stay (2) in the direction as shown in the figure.

1 : Exhaust manifold
A : Upper mark
⇦ : Engine front

NOTE:
This figure shows 2WD models as an example.

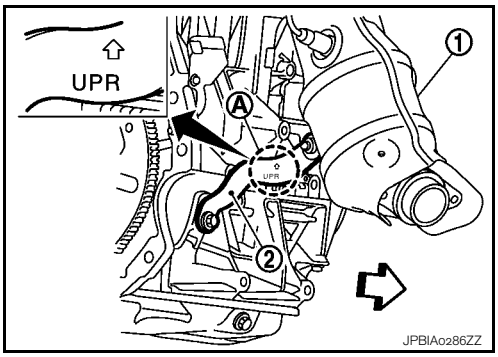

3. Install remaining parts in the reverse order of removal.

Inspection

INFOID:0000000000893936

INSPECTION AFTER REMOVAL

cardiagn.com

Surface Distortion

- Using straightedge (B) and feeler gauge (A), check the surface distortion of exhaust manifold mating surface in each exhaust port and entire part.

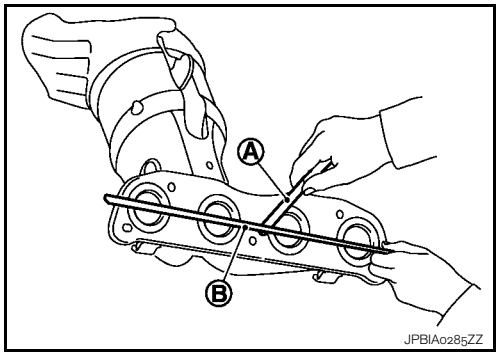

Limit : Refer to EM-236, "Exhaust Manifold".

- If it exceeds the limit, replace exhaust manifold.

cardiagn.com

OIL PAN (LOWER)

Exploded View

INFOID:0000000000893937

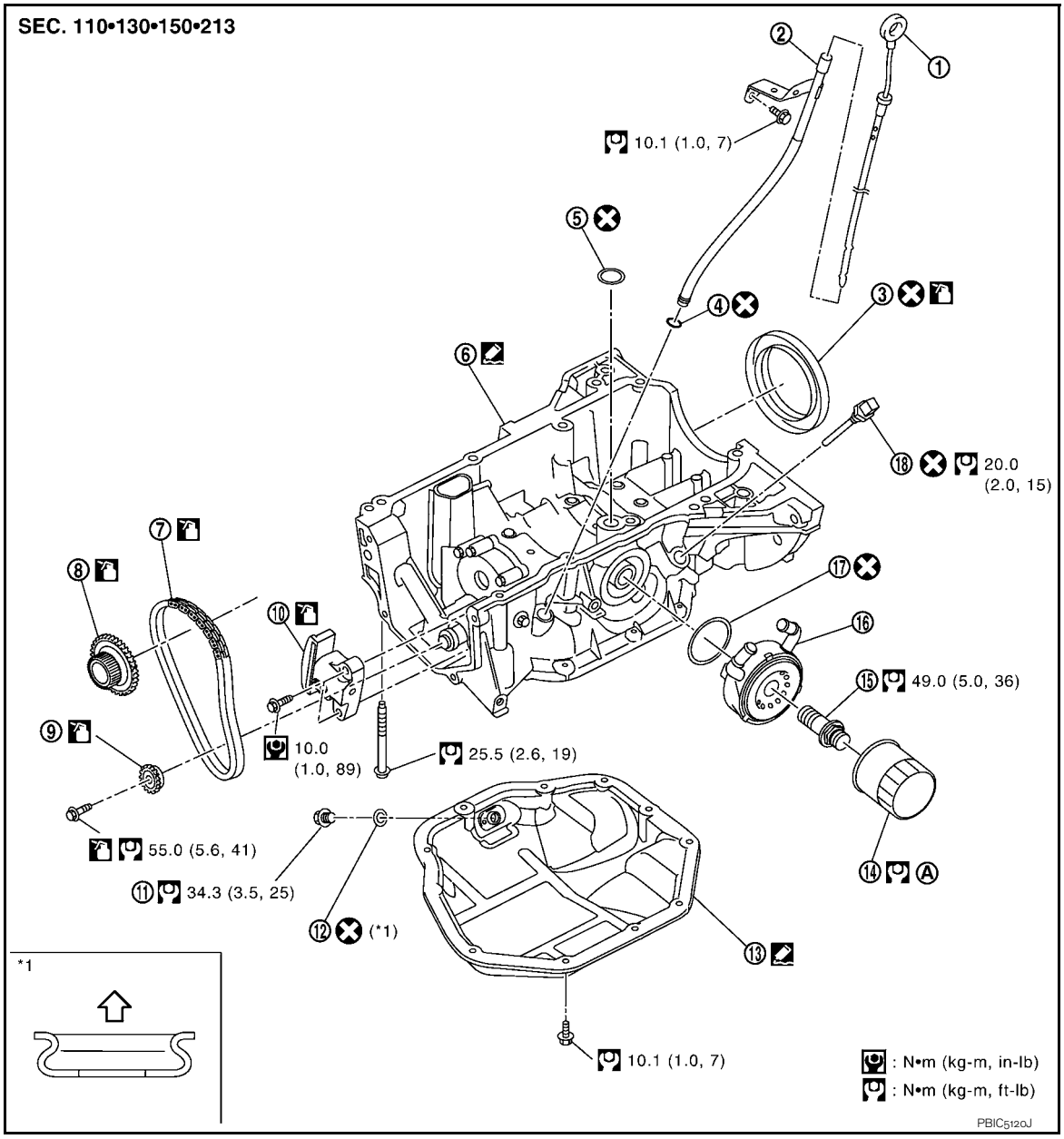

1.	Oil level gauge	2.	Oil level gauge guide	3.	Rear oil seal
4.	O-ring	5.	O-ring	6.	Oil pan (upper)
7.	Balancer unit timing chain	8.	Crankshaft sprocket	9.	Balancer unit sprocket
10.	Balancer unit timing chain tensioner	11.	Drain plug	12.	Drain plug washer
13.	Oil pan (lower)	14.	Oil filter	15.	Connector bolt
16.	Oil cooler	17.	O-ring	18.	Oil level sensor

A. Refer to LU-17

⇦ : Oil pan side

Refer to GI-4, "Components" for symbols in the figure.

Removal and Installation

INFOID:0000000000893938

cardiagn.com

REMOVAL

1. Remove engine undercover.
2. Drain engine oil. Refer to LU-15, "Draining".
3. Remove oil pan (lower) with the following procedure:

a. Loosen mounting bolts in reverse order as shown in the figure.

⇦ : Engine front

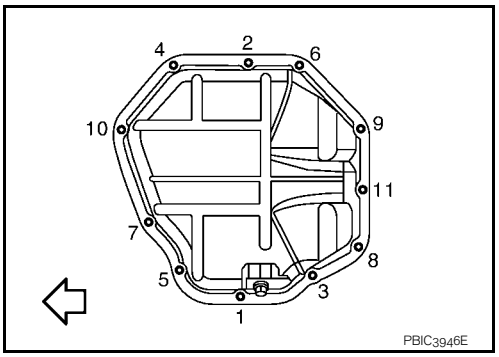

b. Insert seal cutter (SST) between oil pan (upper) and oil pan (lower).
CAUTION:
Be careful not to damage the mating surface.

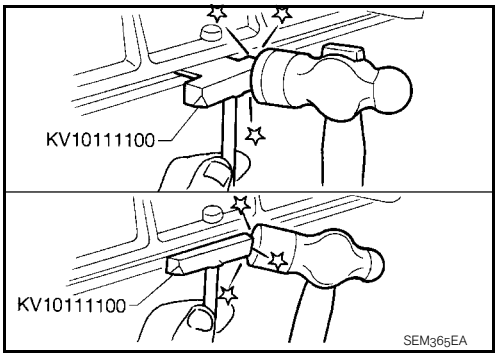

INSTALLATION

Note the following, and install in the reverse order of removal.

1. Install oil pan (lower) with the following procedure:

a. Use a scraper (A) to remove old liquid gasket from mating surfaces.
- Also remove old liquid gasket from mating surface of oil pan (upper).
- Remove old liquid gasket from the bolt holes and threads.

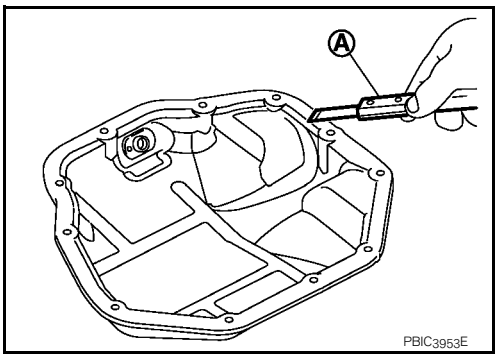

cardiagn.com

b. Apply a continuous bead of liquid gasket (A) with a tube presser (commercial service tool) as shown in the figure.

1 : Oil pan (lower)

⬅ : Engine outside

Use Genuine Liquid Gasket or equivalent.

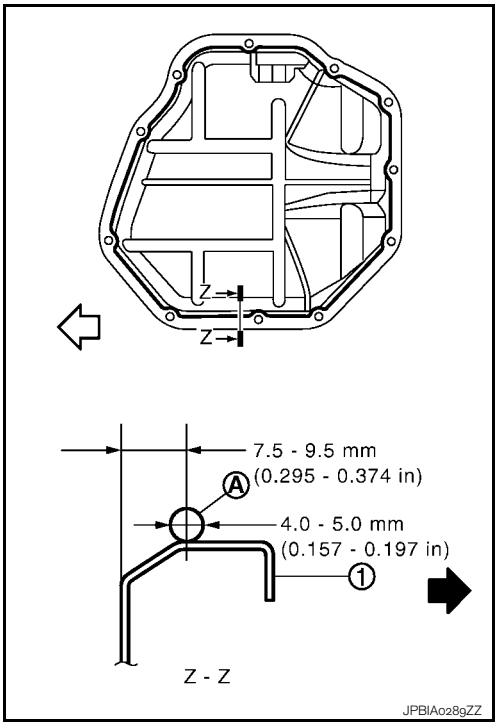

c. Tighten bolts in numerical order as shown in the figure.

⇦ : Engine front

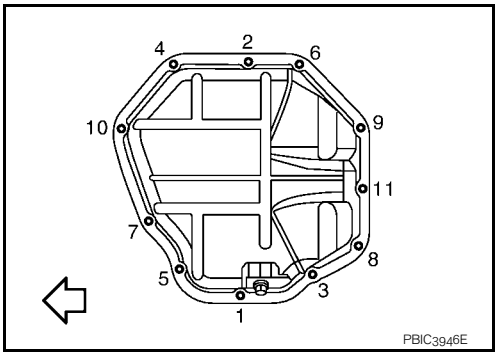

Inspection

INFOID:0000000000893939

INSPECTION AFTER REMOVAL

Clean oil strainer portion [part of the oil pan (upper)] if any object attached.

INSPECTION AFTER INSTALLATION

1. Check the engine oil level and adjust engine oil. Refer to LU-14, "Inspection".
2. Start engine, and check there is no leak of engine oil.
3. Stop engine and wait for 10 minutes.
4. Check the engine oil level again. Refer to LU-14, "Inspection".

cardiagn.com

FUEL INJECTOR AND FUEL TUBE

Exploded View

INFOID:0000000000893940

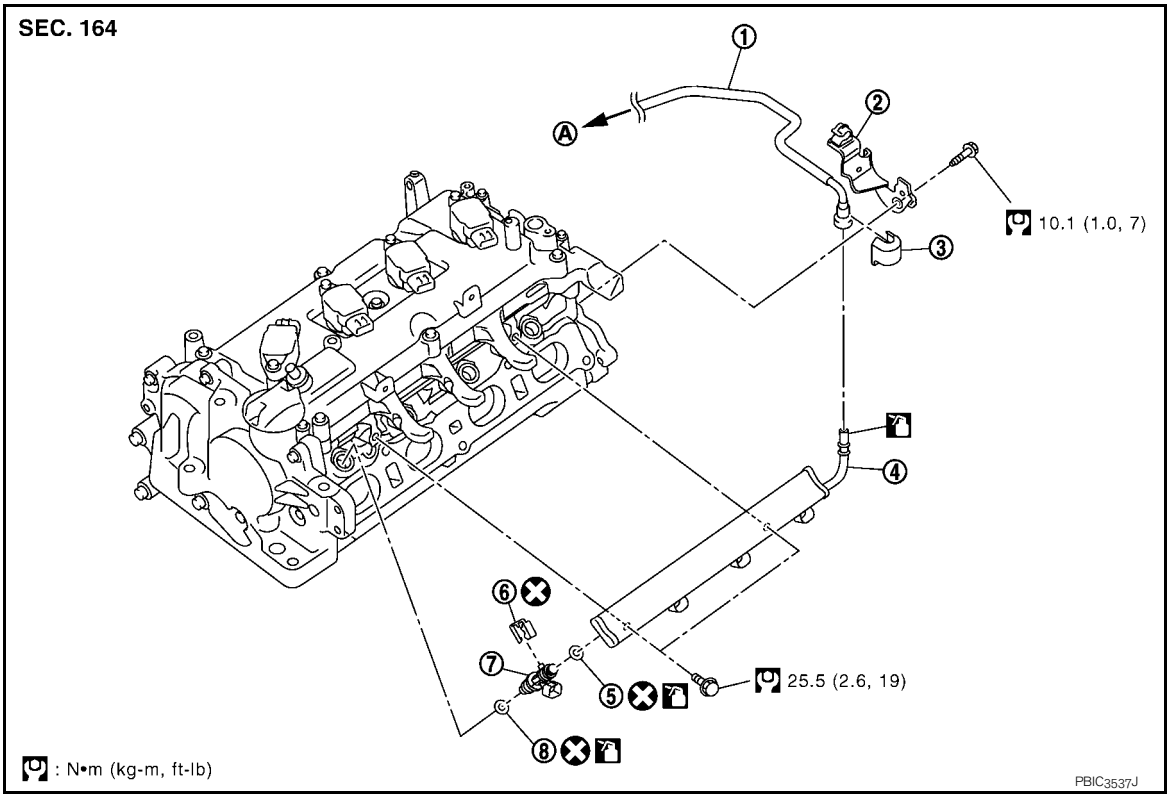

1. Fuel feed tube
2. Bracket
3. Quick connector cap
4. Fuel tube
5. O-ring (black)
6. Clip
7. Injector
8. O-ring (green)

A. To centralized under-floor piping

Refer to GI-4, "Components" for symbols in the figure.

CAUTION:
Never remove or disassemble parts unless instructed in the figure.

Removal and Installation

INFOID:0000000000893941

WARNING:
- **Put a “CAUTION: FLAMMABLE” sign in the workshop.**
- **Be sure to work in a well ventilated area and furnish workshop with a CO_2 fire extinguisher.**
- **Never smoke while servicing fuel system. Keep open flames and sparks away from the work area.**

REMOVAL

1. Release the fuel pressure. Refer to EC-978, "Inspection".
2. Remove intake manifold. Refer to EM-29, "Exploded View".

cardiagn.com

3. Disconnect quick connector with the following procedure. Disconnect fuel feed hose (1) from fuel tube (3).
   NOTE:
   There is no fuel return path.
   a. Remove quick connector cap (2) from quick connector connection.
   b. Disconnect fuel feed hose from hose clamp.

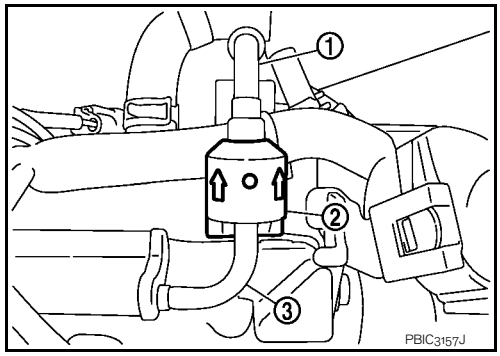

   c. With the sleeve side of quick connector release facing quick connector, install quick connector release onto fuel tube.
   d. Insert quick connector release into quick connector until sleeve contacts and goes no further. Hold quick connector release on that position.
   CAUTION:
   Inserting quick connector release hard will not disconnect quick connector. Hold quick connector release where it contacts and goes no further.

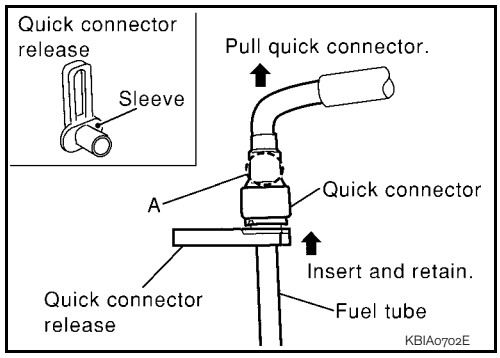

   e. Draw and pull out quick connector straight from fuel tube.
   CAUTION:
   - **Pull quick connector holding "A" position in the figure.**
   - **Never pull with lateral force applied. O-ring inside quick connector may be damaged.**
   - **Prepare container and cloth beforehand as fuel will leak out.**
   - **Avoid fire and sparks.**
   - **Keep parts away from heat source. Especially, be careful when welding is performed around them.**
   - **Never expose parts to battery electrolyte or other acids.**
   - **Never bend or twist connection between quick connector and fuel feed hose during installation/removal.**
   - **To keep clean the connecting portion and to avoid damage and foreign materials, cover them completely with plastic bags or something similar.**

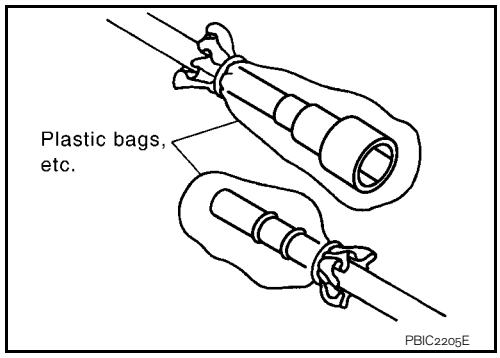

4. Disconnect harness connector from fuel injector.
5. Remove fuel tube and fuel injector assembly.
   - Loosen mounting bolts in reverse order as shown in the figure.

   ⇦ : Engine front

CAUTION:
- **When removing, be careful to avoid any interference with fuel injector.**
- **Use a shop cloth to absorb any fuel leaks from fuel tube.**

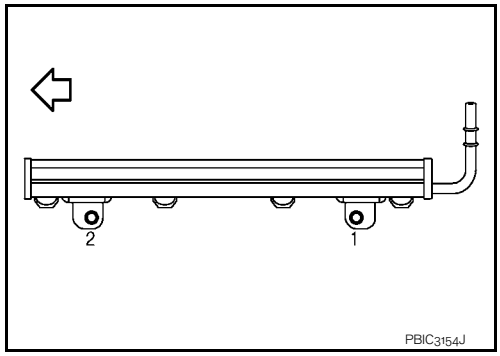

cardiagn.com

6. Remove fuel injector (3) from fuel tube (1) with the following procedure:

a. Open and remove clip (2).

b. Remove fuel injector from fuel tube by pulling straight.
CAUTION:
- **Be careful with remaining fuel that may go out from fuel tube.**
- **Be careful not to damage fuel injector nozzle during removal.**
- **Never bump or drop fuel injector.**
- **Never disassemble fuel injector.**

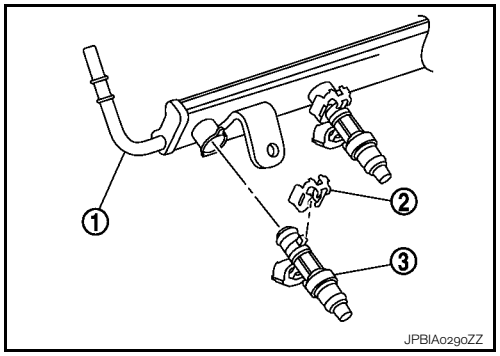

INSTALLATION

1. Note the following, and install O-rings to fuel injector.
CAUTION:
- **Upper and lower O-rings are different. Be careful not to confuse them.**

Fuel tube side	**: Black**
Nozzle side	**: Green**

- **Handle O-ring with bare hands. Never wear gloves.**
- **Lubricate O-ring with new engine oil.**
- **Never clean O-ring with solvent.**
- **Make sure that O-ring and its mating part are free of foreign material.**
- **When installing O-ring, be careful not to scratch it with tool or fingernails. Also be careful not to twist or stretch O-ring. If O-ring is stretched while installing, never insert it quickly into fuel tube.**
- **Insert O-ring straight into fuel tube. Never decenter or twist it.**

2. Install fuel injector (4) to fuel tube (1) with the following procedure:

3 : O–ring (black)
5 : O–ring (green)

a. Insert clip (2) into clip mounting groove (F) on fuel injector.
- Insert clip so that protrusion (G) of fuel injector matches cut-out (D) of clip.

CAUTION:
- **Never reuse clip. Replace it with a new one.**
- **Be careful to keep clip from interfering with O-ring. If interference occurs, replace O-ring.**

b. Insert fuel injector into fuel tube with clip attached.
- Insert it while matching it to the axial center.
- Insert fuel injector so that protrusion (B) of fuel tube matches cut-out (C) of clip.
- Make sure that fuel tube flange (A) is securely fixed in flange fixing groove (E) on clip.

c. Make sure that installation is complete by making sure that fuel injector does not rotate or come off.

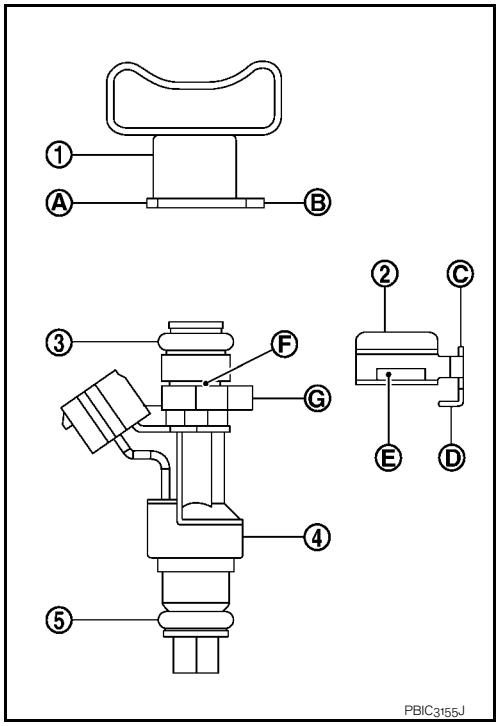

3. Set fuel tube and fuel injector assembly at its position for installation on cylinder head.
CAUTION:
For installation, be careful not to interfere with fuel injector nozzle.

4. Install fuel tube and injector assembly onto cylinder.

cardiagn.com

- Tighten mounting bolts in numerical order as shown in the figure.

⇦ : Engine front

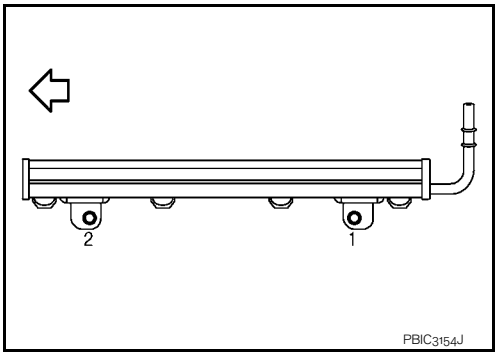

5. Connect harness connector to fuel injector.
6. Connect fuel feed hose with the following procedure.

a. Check for damage or foreign material on the fuel tube and quick connector.
b. Apply new engine oil lightly to area around the top of fuel tube.
c. Align center to insert quick connector straightly into fuel tube.
   - Insert quick connector to fuel tube until the top spool on fuel tube is inserted completely and the 2nd level spool is positioned slightly below quick connector bottom end.

   CAUTION:
   - **Hold "A" position in the figure when inserting fuel tube into quick connector.**
   - **Carefully align center to avoid inclined insertion to prevent damage to O-ring inside quick connector.**
   - **Insert until you hear a "click" sound and actually feel the engagement.**
   - **To avoid misidentification of engagement with a similar sound, be sure to perform the next step.**

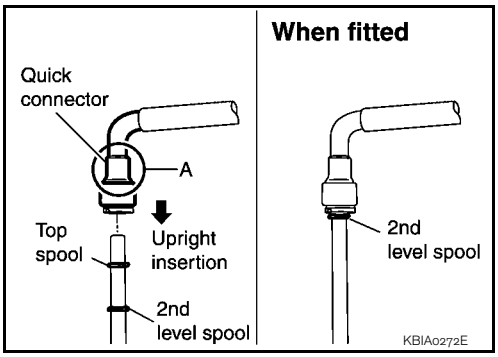

d. Before clamping fuel feed hose with hose clamp, pull quick connector hard by hand holding "A" position. Make sure it is completely engaged (connected) so that it does not come out from fuel tube.
e. Install quick connector cap (2) to quick connector connection.

   1. Fuel feed hose
   3. Fuel tube

   - Install quick connector cap with the side arrow facing quick connector side (fuel feed hose side).

   CAUTION:
   - **Make sure that the quick connector and fuel tube are securely engaged with the quick connector cap mounting groove.**
   - **Quick connector may not be connected correctly if quick connector cap cannot be installed easily. Remove the quick connector cap, and then check the connection of quick connector again.**

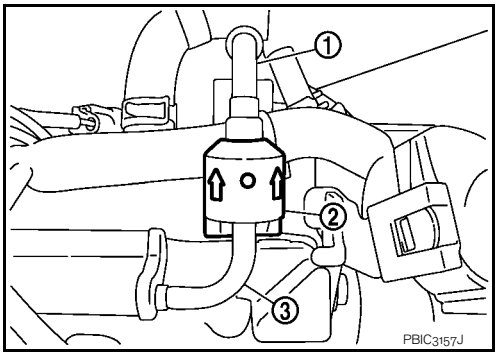

f. Install fuel feed hose to hose clamp.
7. Install remaining parts in the reverse order of removal.

Inspection

INFOID:0000000000893942

INSPECTION AFTER INSTALLATION

Check on Fuel Leakage

1. Turn ignition switch "ON" (with the engine stopped). With fuel pressure applied to fuel piping, make sure there are no fuel leaks at connection points.

   NOTE:
   Use mirrors for checking at points out of clear sight.

cardiagn.com

2. Start the engine. With engine speed increased, make sure again that there are no fuel leaks at connection points.
   CAUTION:
   Never touch the engine immediately after stopped, as the engine becomes extremely hot.

cardiagn.com

IGNITION COIL , SPRAK PLUG AND ROCKER COVER

Exploded View

INFOID:0000000000896389

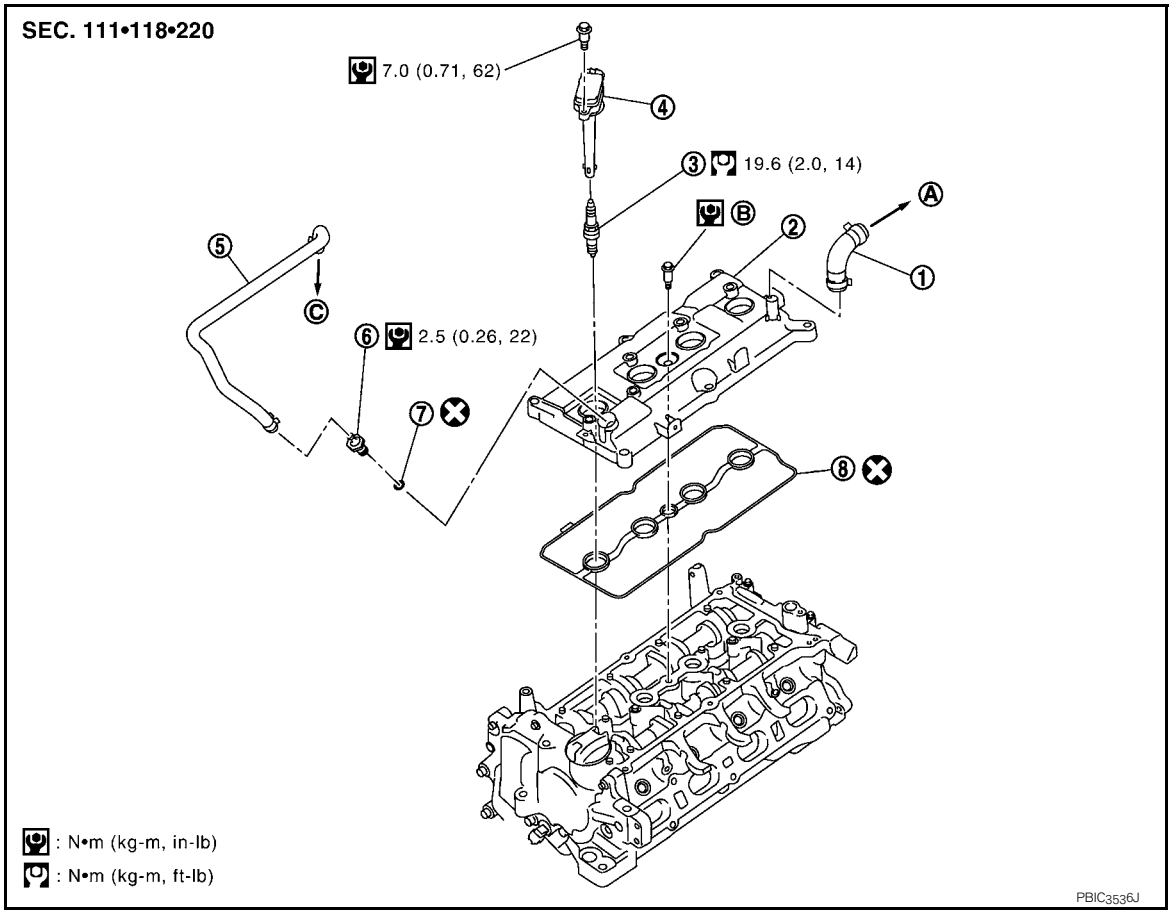

1. PCV hose	2. Rocker cover	3. Spark plug
4. Ignition coil	5. PCV hose	6. PCV valve
7. O-ring	8. Gasket	
A. To air duct	B. Refer to EM-160	C. To intake manifold

Refer to GI-4, "Components" for symbols in the figure.

Removal and Installation

INFOID:0000000000896390

REMOVAL

1. Remove intake manifold. Refer to EM-146, "Removal and Installation".
2. Remove ignition coil.
   CAUTION:
   - **Handle ignition coil carefully and avoid impacts.**
   - **Never disassemble ignition coil.**
3. Remove rocker cover.

cardiagn.com

- Loosen bolts in reverse order shown in the figure.

⇦ : Engine front

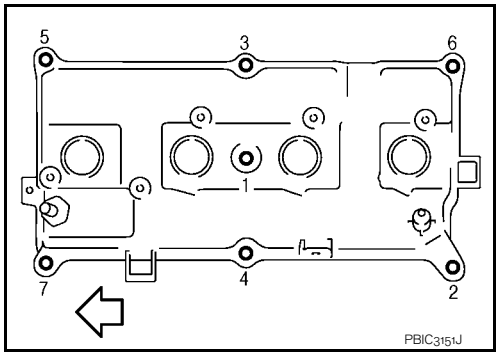

4. Remove rocker cover gasket from rocker cover.
5. Use scraper to remove all traces of liquid gasket from cylinder head and front cover.
   CAUTION:
   Never scratch or damage the mating surface when cleaning off old liquid gasket.

INSTALLATION

1. Install the rocker cover gasket to rocker cover.
   CAUTION:
   Make sure the gasket is not dropped.
2. Install rocker cover.
   - Tighten bolts in two steps separately in numerical order as shown in the figure.

⇦ : Engine front

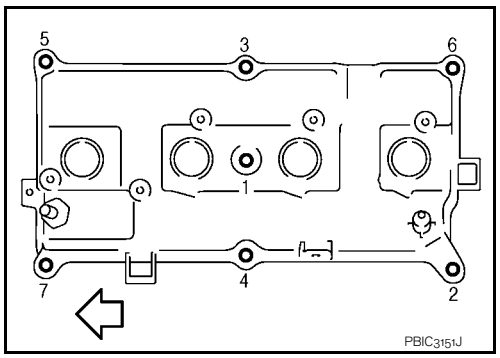

1st step

: 1.96 N·m (0.20 kg-m, 17 in-lb)

2nd step

: 8.33 N·m (0.85 kg-m, 74 in-lb)

3. Install in the reverse order of removal, for the rest of parts.

cardiagn.com

TIMING CHAIN

Exploded View

INFOID:0000000000893947

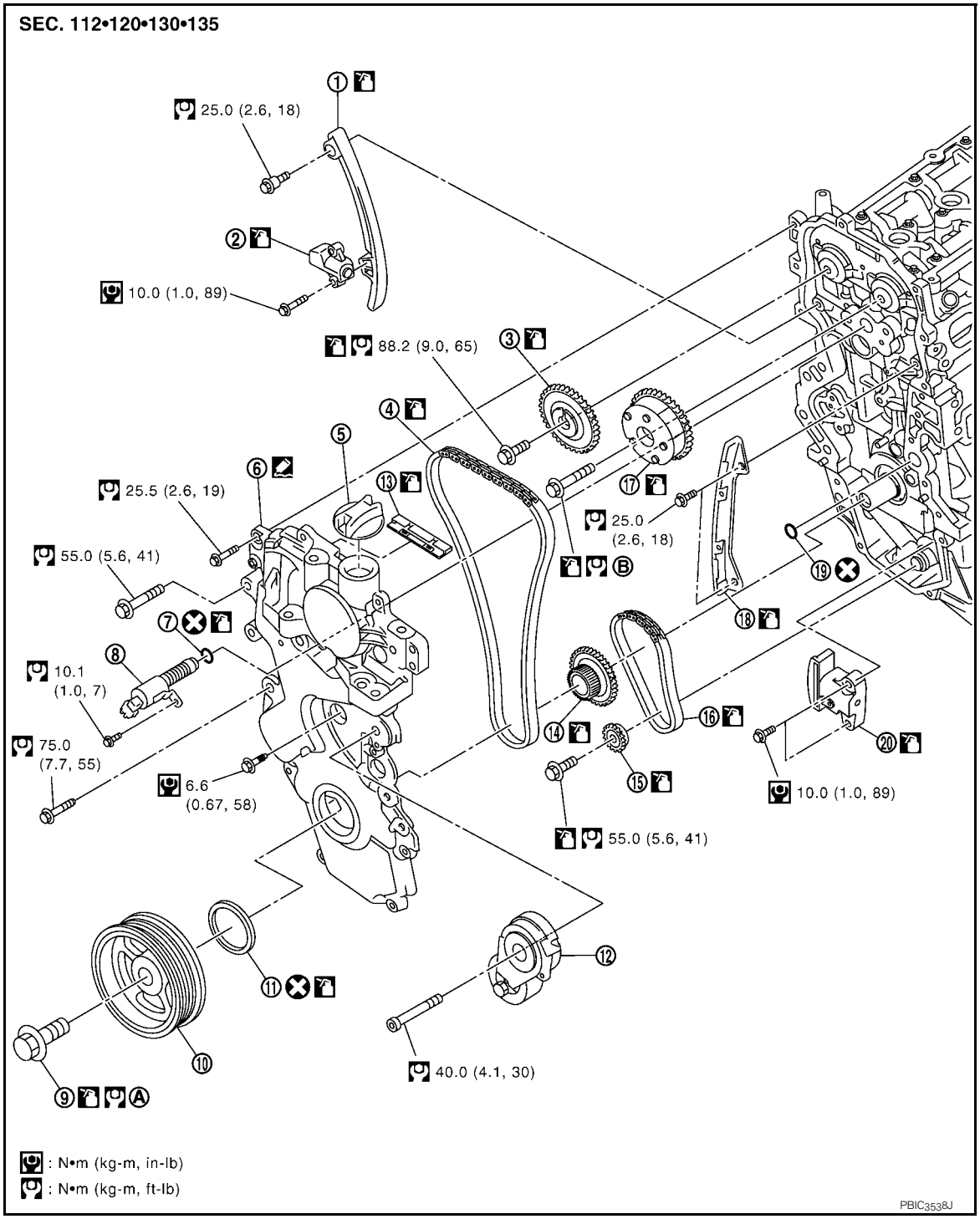

1.	Timing chain slack guide	2.	Timing chain tensioner	3.	Camshaft sprocket (EXH)
4.	Timing chain	5.	Oil filler cap	6.	Front cover
7.	O-ring	8.	Intake valve timing control solenoid valve	9.	Crankshaft pulley bolt
10.	Crankshaft pulley	11.	Front oil seal	12.	Drive belt auto-tensioner
13.	Timing chain tension guide (front cover side)	14.	Crankshaft sprocket	15.	Balancer unit sprocket

cardiagn.com

16. Balancer unit timing chain
17. Camshaft sprocket (INT)
18. Timing chain tension guide
19. O-ring
20. Balancer unit timing chain tensioner

A. Refer to EM-163
B. Refer to EM-163

Refer to GI-4, "Components" for symbols in the figure.

Removal and Installation

INFOID:0000000000893948

REMOVAL

CAUTION:
The rotating direction in the text indicates all directions seen from the engine front.

1. Remove front wheel (RH). Refer to WT-4, "Road Wheel".
2. Remove front fender protector (RH). Refer to EXT-21, "Exploded View".
3. Drain engine oil. Refer to LU-15, "Draining".
   CAUTION:
   Perform this step when engine is cold.
4. Remove the following parts.
   - Intake manifold: Refer to EM-146, "Exploded View".
   - Rocker cover: Refer to EM-160, "Exploded View".
   - Drive belt: Refer to EM-134, "Removal and Installation".
5. Set No. 1 cylinder at TDC on its compression stroke with the following procedure:

a. Rotate crankshaft pulley (1) clockwise and align TDC mark (no paint) (B) to timing indicator (A) on front cover.

C : White paint mark (Not use for service)

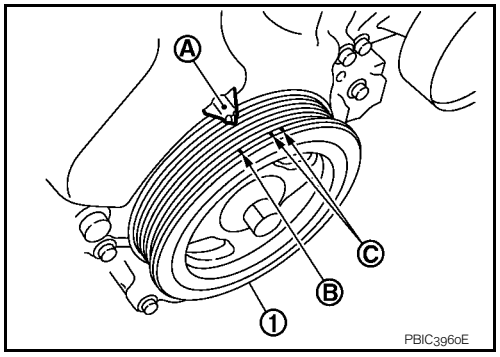

b. At the same time, make sure that the cam noses of the No.1 cylinder are located (⬅) as shown in the figure.

1 : Camshaft (INT)
2 : Camshaft (EXH)
⇦ : Engine front

- If not, rotate crankshaft pulley one revolution (360 degrees) and align as shown in the figure.

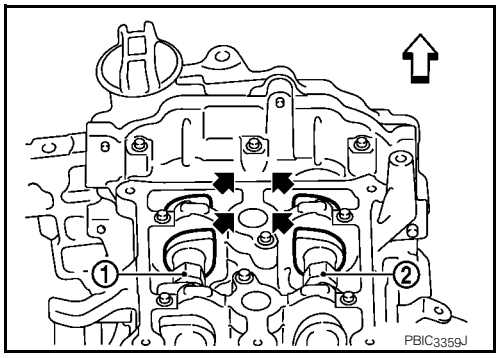

6. Remove crankshaft pulley with the following procedure:

a. Fix crankshaft pulley (1) with a pulley holder (A) (commercial service tool), loosen crankshaft pulley bolt, and locate bolt seating surface at 10 mm (0.39 in) from its original position.
CAUTION:
Never remove the crankshaft pulley bolt as they will be used as a supporting point for the pulley puller [SST: KV11103000].

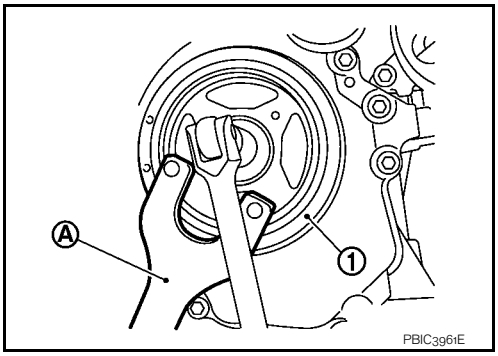

b. Attach a pulley puller (A) [SST: KV11103000] in the M6 thread hole on crankshaft pulley (1), and remove crankshaft pulley.

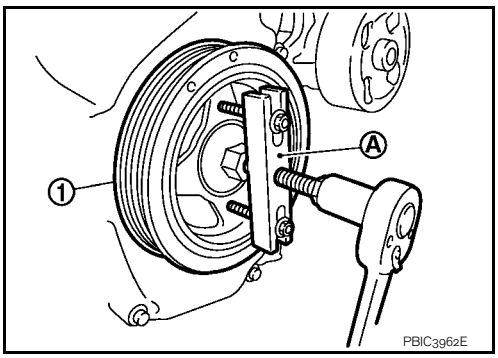

7. Remove rear torque rod. Refer to EM-194, "M/T : Exploded View" (M/T models) or EM-198, "CVT : Exploded View" (CVT models).
8. Support the bottom surface of engine using a transmission jack, and then remove the engine mounting stay and the engine mounting insulator (RH). Refer to EM-194, "M/T : Exploded View" (M/T models) or EM-198, "CVT : Exploded View" (CVT models).
9. Remove oil pan (lower). Refer to EM-152, "Exploded View".
NOTE:
If crankshaft sprocket and balancer unit component are not removed, this step is unnecessary.
10. Remove intake valve timing control solenoid valve.
11. Remove drive belt auto-tensioner.
12. Remove front cover with the following procedure:

a. Loosen mounting bolts in reverse order as shown in the figure.

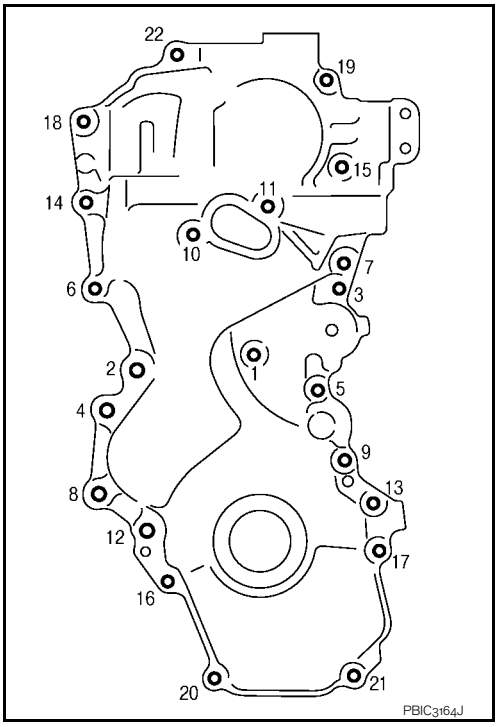

cardiagn.com

b. Cut liquid gasket by prying the position (⬅) shown in the figure, and then remove the front cover.
CAUTION:
- **Be careful not to damage the mating surface.**
- **A more adhesive liquid gasket is applied compared to previous types when shipped, so it should not be forced off the position not specified.**

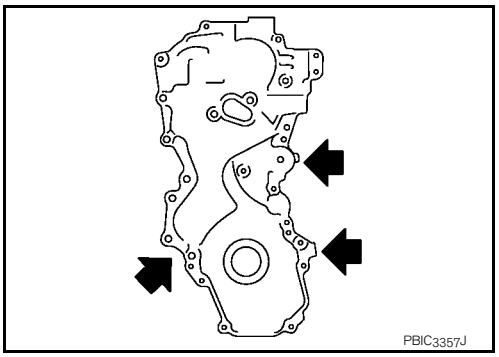

13. Remove front oil seal from front cover.
- Lift up front oil seal using a screwdriver.

CAUTION:
Be careful not to damage front cover.

14. Remove timing chain tensioner with the following procedure:

a. Push in timing chain tensioner plunger.

b. Insert a stopper pin (A) into the body hole, and then fix it with the plunger pushed in.
NOTE:
Use approximately 1.5 mm (0.059 in) diameter. hard metal pin as a stopper pin.

c. Remove timing chain tensioner (1).

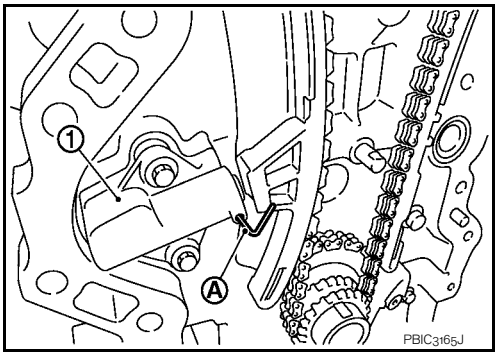

15. Remove timing chain slack guide (2), timing chain tension guide (3) and timing chain (1).
CAUTION:
Never rotate each crankshaft and camshaft individually while timing chain is removed. It causes interference between valve and piston.

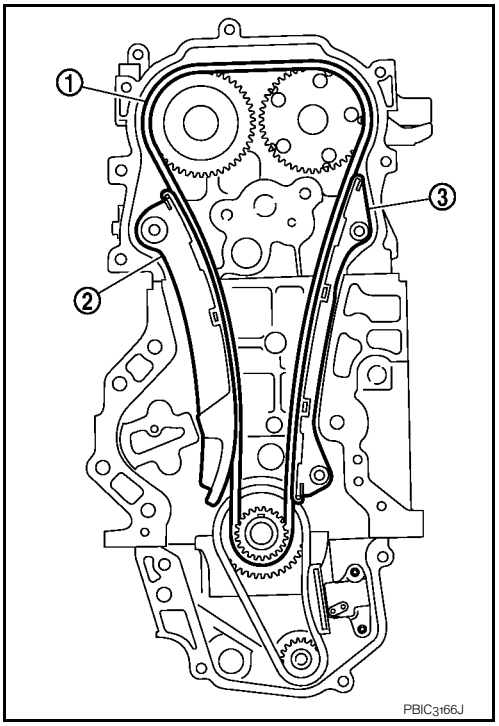

16. Remove crankshaft sprocket and balancer unit drive component with the following procedure:

cardiagn.com

a. Fully lift up lever (A), and push the timing chain slack guide (B) into the inside of balancer unit timing chain tensioner (1).
   - The slack guide is released by fully lifting the lever up. As the result, the slack guide can be moved.

b. Matching the hole on lever with the hole on tensioner body, insert a stopper pin (C) to secure the slack guide.
   NOTE:
   Use approximately 1.0 mm (0.04 in) diameter. hard metal pin as a stopper pin.

c. Remove balancer unit timing chain tensioner.
   - When the holes on lever and tensioner body cannot be aligned, align these holes by slightly moving the slack guide.

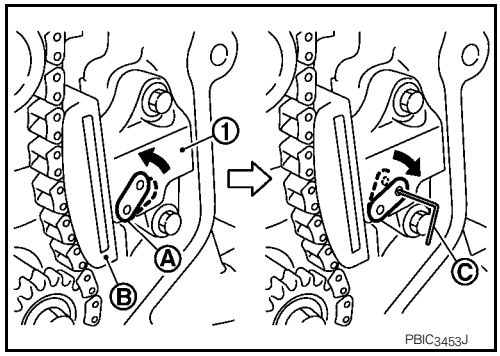

d. Hold the WAF part of balancer shaft [WAF:19.0 mm (0.75 in)] (A), and then loosen the balancer unit sprocket bolt.

   1 : Oil pan (upper)

   ⇦ : Engine front

   CAUTION:
   - **Secure the balancer unit shaft with the WAF part.**
   - **Never loosen the balancer unit sprocket bolt by tightening the balancer unit drive chain.**

e. Remove crankshaft sprocket, balancer unit sprocket and balancer unit timing chain as a set.

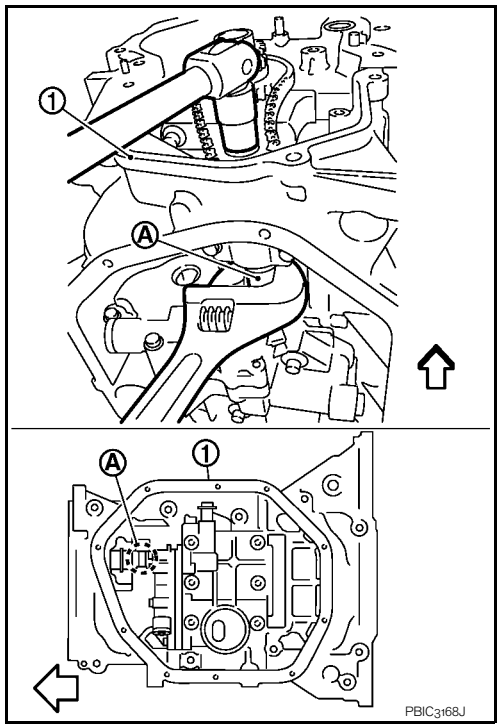

17. Remove timing chain tension guide (front cover side) from front cover, if necessary.

INSTALLATION

NOTE:

cardiagn.com

The figure shows the relationship between the matching mark on each timing chain and that on the corresponding sprocket, with the components installed.

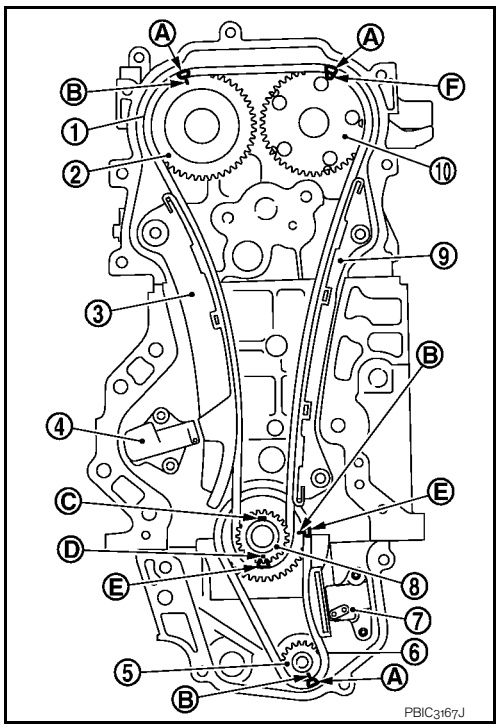

1. Make sure that crankshaft key points straight up.

1	: Timing chain
2	: Camshaft sprocket (EXH)
3	: Timing chain slack guide
4	: Timing chain tensioner
5	: Balancer unit sprocket
6	: Balancer unit drive chain
7	: Balancer unit timing chain tensioner
8	: Crankshaft sprocket
9	: Timing chain tension guide
10	: Camshaft sprocket (INT)
A	: Matching mark (dark blue link)
B	: Matching mark (stamping)
C	: Crankshaft key position (straight up)
D	: Matching mark (stamping)
E	: Matching mark (orange link)
F	: Matching mark (outer groove*)

*: There are two outer grooves in camshaft sprocket (INT). The wider one is a matching mark.

2. If the timing chain tension guide (front cover side) is removed, install it to the front cover.
CAUTION:
Check the joint condition by sound or feeling.

3. Install crankshaft sprocket (2), balancer unit sprocket (3) and balancer unit timing chain (1).

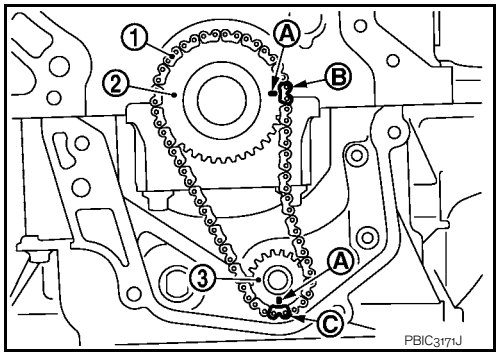

A	: Matching mark (stamping)
B	: Matching mark (orange link)
C	: Matching mark (dark blue link)

- Install it by aligning matching marks on each sprocket and balancer unit timing chain.
- If these matching marks are not aligned, rotate the balancer shaft slightly to correct the position.

CAUTION:
Check matching mark position of each sprocket after installing the balancer unit timing chain.

cardiagn.com

4. Hold the WAF part of balancer unit shaft [WAF: 19.0 mm (0.75 in)] (A), and then tighten the balancer shaft sprocket bolt.

   1 : Oil pan (upper)

   ⇦ : Engine front

   CAUTION:
   - **Secure the balancer unit shaft with the WAF part.**
   - **Never loosen the balancer shaft sprocket bolt by tightening the balancer unit timing chain.**

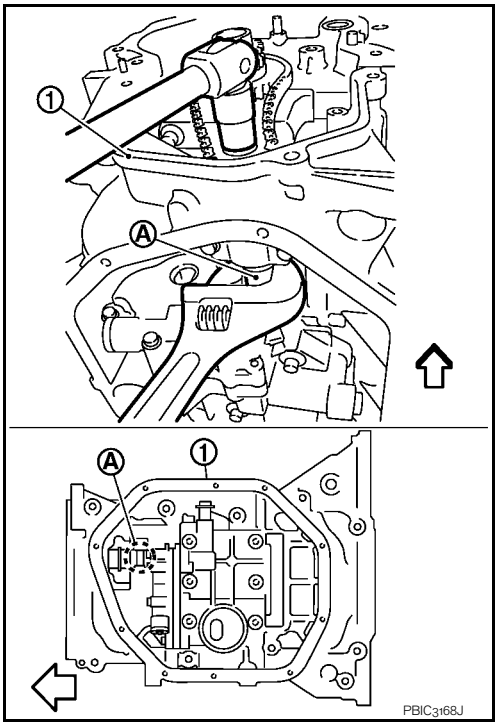

5. Install balancer unit timing chain tensioner (1).
   - Fix the plunger at the most compressed position using a stopper pin (A), and then install it.
   - Securely pull out (⬅) the stopper pin after installing the balancer unit timing chain tensioner.
   - Check matching mark position of balancer unit timing chain and each sprocket again.

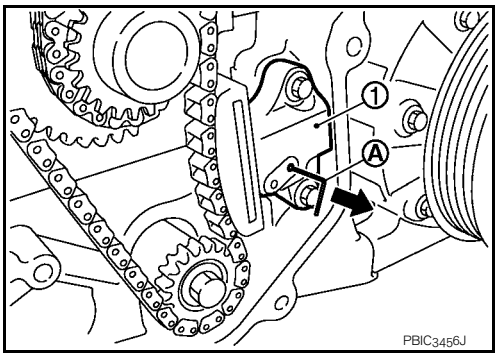

cardiagn.com

6. Align the matching marks of each sprocket with the matching marks of timing chain.

   1 : Camshaft sprocket (EXH)
   2 : Camshaft sprocket (INT)
   3 : Timing chain
   A : Matching mark (dark blue link)
   B : Matching mark (stamping)
   C : Matching mark (outer groove*)
   D : Matching mark (orange link)
   E : Matching mark (stamping)

   *: There are 2 outer grooves in camshaft sprocket (INT). The wider one is a matching mark.

   - If these matching marks are not aligned, rotate the camshaft slightly by holding the hexagonal portion to correct the position.

   CAUTION:
   Check matching mark position of each sprocket and timing chain again after installing the timing chain.

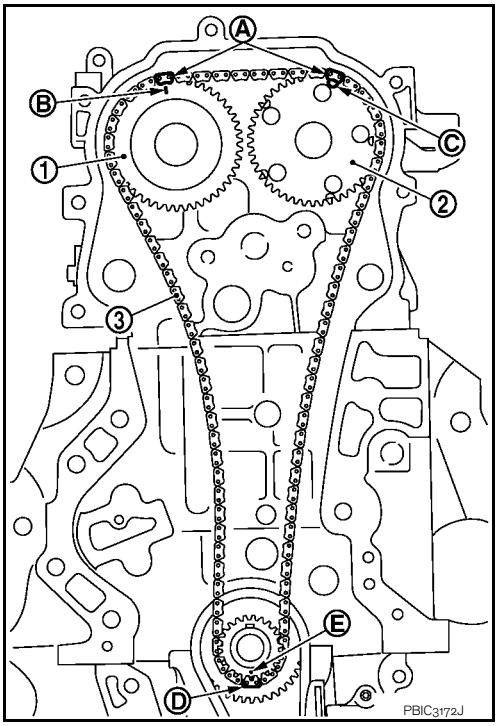

7. Install the timing chain tension guide (3) and the timing chain slack guide (2).

   1 : Timing chain

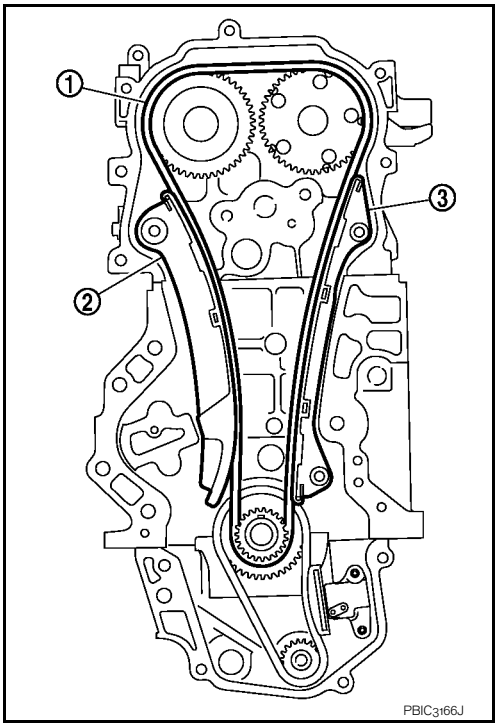

8. Install timing chain tensioner (1).
   - Fix the plunger at the most compressed position using a stopper pin (A), and then install it.
   - Securely pull out the stopper pin after installing the timing chain tensioner.

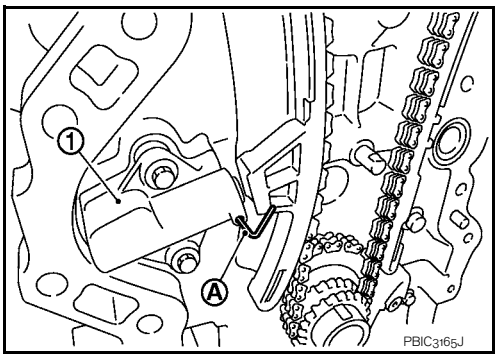

cardiagn.com

9. Check matching mark position of timing chain and each sprocket again.
10. Install front oil seal. Refer to EM-182, "FRONT OIL SEAL : Removal and Installation".
11. Install front cover with the following procedure:

a. Install new O-ring to cylinder block.
CAUTION:
Never misalign O-ring.

b. Apply a continuous bead of liquid gasket (B) with a tube presser (commercial service tool) to front cover as shown in the figure.

A : Liquid gasket application area

⇦ : Engine outside

Use Genuine Liquid Gasket or equivalent.

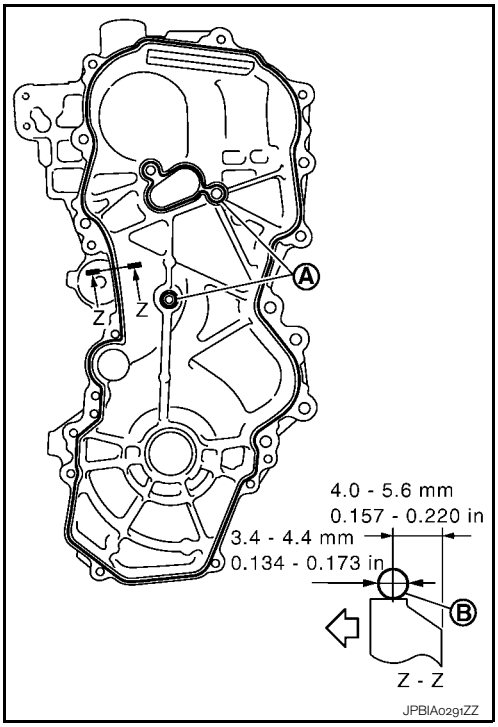

c. Make sure that matching marks of timing chain and each sprocket are still aligned. Then install front cover.
CAUTION:
- **Make sure O-ring on cylinder block is correctly installed.**
- **Be careful not to damage front oil seal by interference with front end of crankshaft.**

d. Install front cover, and tighten mounting bolts in numerical order as shown in the figure.
- Refer to the following for the installation position of bolts.

M6 : No.1
M10 : No. 6, 7, 10, 11, 14
M12 : No. 2, 4, 8, 12
M8 : Except the above

CAUTION:
Attaching should be done within 5 minutes after liquid gasket application.

e. After all bolts are tightened, retighten them to specified torque in numerical order as shown in the figure.
CAUTION:
Be sure to wipe off any excessive liquid gasket leaking.

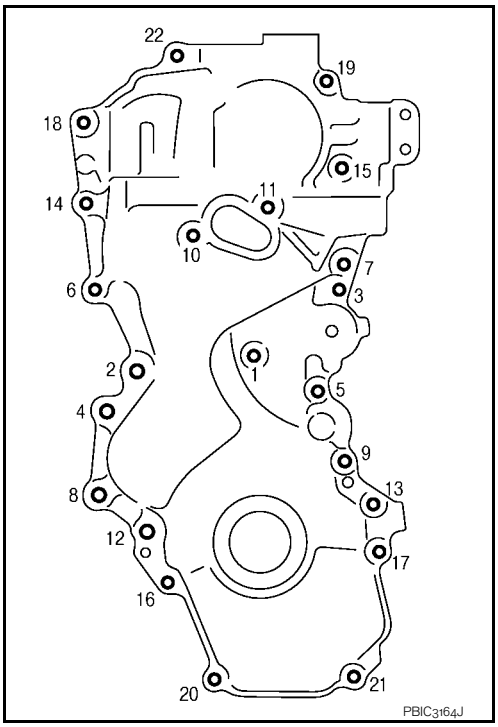

12. Install crankshaft pulley with the following procedure:

cardiagn.com

a. When inserting crankshaft pulley with a plastic hammer, tap on its center portion (not circumference).
CAUTION:
Never damage front oil seal lip section.

b. Secure crankshaft pulley (1) with a pulley holder (A) (commercial service tool).

c. Apply new engine oil to thread and seat surfaces of crankshaft pulley bolt.

d. Tighten crankshaft pulley bolt.

: 68.6 N·m (7.0 kg-m, 51 ft-lb)

e. Completely loosen.

: 0 N·m (0 kg-m, 0 ft-lb)

f. Tighten crankshaft pulley bolt.

: 29.4 N·m (3.0 kg-m, 22 ft-lb)

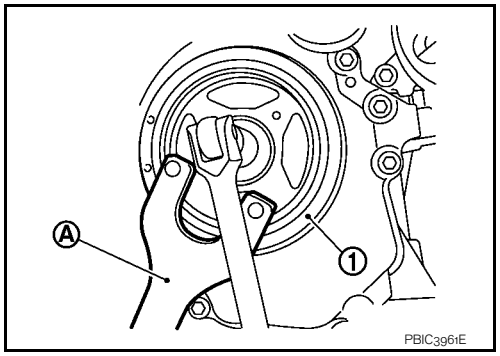

g. Put a paint mark (B) on crankshaft pulley (2), matching with any one of six easy to recognize angle marks (A) on crankshaft pulley bolt (1) flange.

h. Turn another 60 degrees clockwise (angle tightening).
- Check the tightening angle with movement of one angle mark.

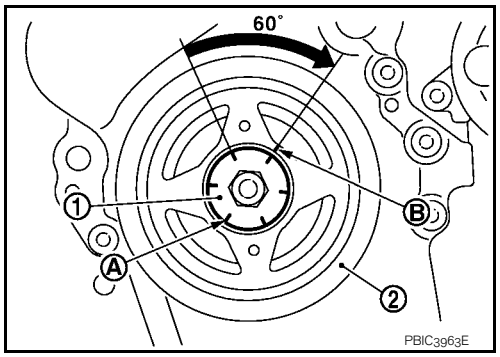

i. Make sure that crankshaft rotates clockwise smoothly.

13. Install remaining parts in the reverse order of removal.

Inspection

INFOID:0000000000893949

INSPECTION AFTER REMOVAL

Timing Chain

Check for cracks (A) and any excessive wear (B) at link plates and roller links of timing chain. Replace timing chain as necessary.

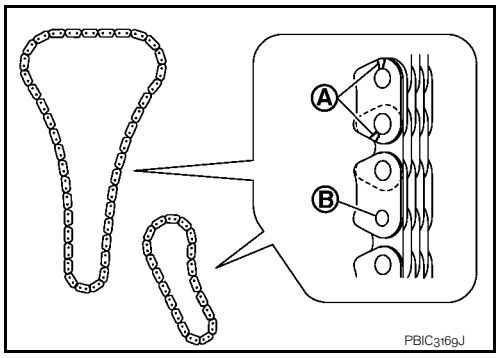

INSPECTION AFTER INSTALLATION

Inspection for Leaks

- Before starting engine, check oil/fluid levels including engine coolant and engine oil. If less than required quantity, fill to the specified level. Refer to MA-21, "Fluids and Lubricants".
- Use procedure below to check for fuel leakage.
- Turn ignition switch “ON” (with engine stopped). With fuel pressure applied to fuel piping, check for fuel leakage at connection points.

cardiagn.com

- Start engine. With engine speed increased, check again for fuel leakage at connection points.
- Run engine to check for unusual noise and vibration.

  NOTE:

  If hydraulic pressure inside chain tensioner drops after removal/installation, slack in guide may generate a pounding noise during and just after the engine start. However, this does not indicate an unusualness. Noise will stop after hydraulic pressure rises.
- Warm up engine thoroughly to make sure there is no leakage of fuel, or any oil/fluids including engine oil and engine coolant.
- Bleed air from lines and hoses of applicable lines, such as in cooling system.
- After cooling down engine, again check oil/fluid levels including engine oil and engine coolant. Refill to the specified level, if necessary.

Summary of the inspection items:

Item	Before starting engine	Engine running	After engine stopped
Engine coolant	Level	Leakage	Level
Engine oil	Level	Leakage	Level
Other oils and fluid*	Level	Leakage	Level
Fuel	Leakage	Leakage	Leakage

* Transmission/transaxle/CVT fluid, power steering fluid, brake fluid, etc.

cardiagn.com

CAMSHAFT

Exploded View

INFOID:0000000000893950

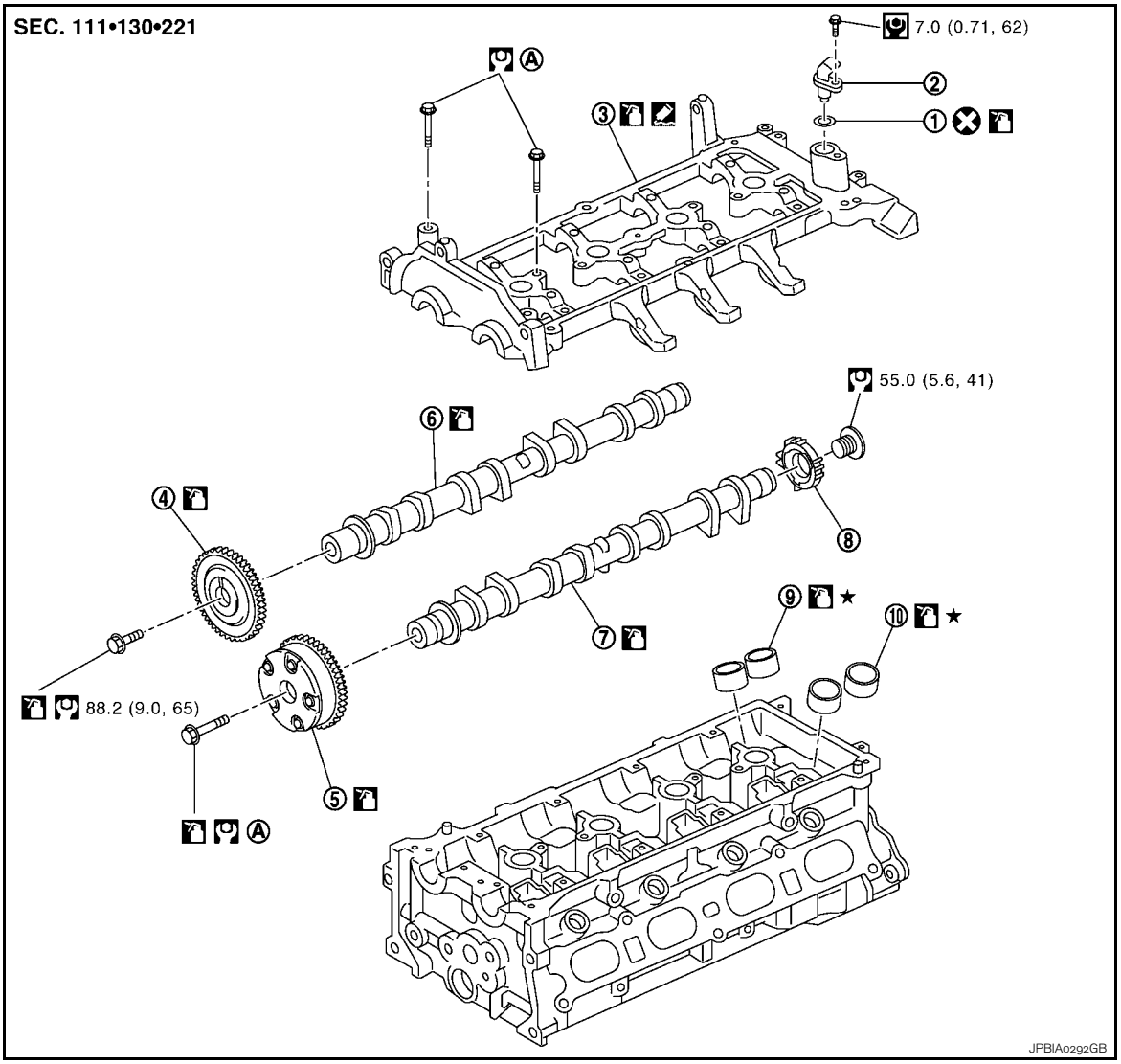

1. O-ring	2. Camshaft position sensor (PHASE)	3. Camshaft bracket
4. Camshaft sprocket (EXH)	5. Camshaft sprocket (INT)	6. Camshaft (EXH)
7. Camshaft (INT)	8. Signal plate	9. Valve lifter (EXH)
10. Valve lifter (INT)		

A. Refer to EM-173

Refer to GI-4, "Components" for symbols shown in the figure.

Removal and Installation

INFOID:0000000000893951

CAUTION:
The rotating direction in the text indicates all directions seen from the engine front.

REMOVAL

1. Remove the following parts.
   - Intake manifold: Refer to EM-146, "Exploded View".
   - Rocker cover: Refer to EM-160, "Exploded View".
   - Front cover and timing chain related parts: Refer to EM-162, "Exploded View".

   NOTE:

cardiagn.com

Removal of balancer unit related part is not necessary.

2. Remove camshaft position sensor (PHASE) from camshaft bracket.

CAUTION:
- **Handle camshaft position sensor (PHASE) carefully and avoid impacts.**
- **Never disassemble camshaft position sensor (PHASE).**
- **Never place sensor where it is exposed to magnetism.**

3. Put the matching mark (A) on the camshaft sprocket (INT) (2) and the camshaft bracket (1) as shown in the figure.

⇦ : Engine front

NOTE:
It prevents the knock pin of the camshaft (INT) from engaging with the incorrect pin hole when installing the camshaft sprocket (INT).

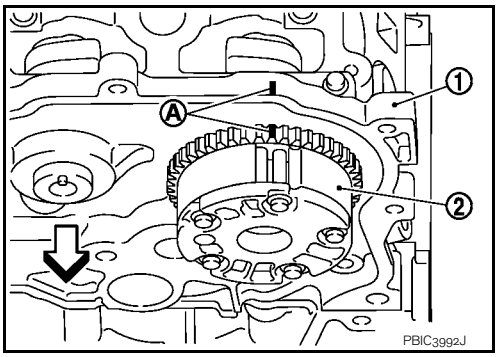

4. Remove camshaft sprockets (INT) (1) and (EXH) (2).
- Secure hexagonal part (A) of camshaft with a wrench. Loosen camshaft sprocket mounting bolts and remove camshaft sprocket.

CAUTION:
- **Never rotate crankshaft or camshaft while timing chain is removed. It causes interference between valve and piston.**
- **Never loosen the mounting bolts with securing anything other than the camshaft hexagonal part or with tensioning the timing chain.**

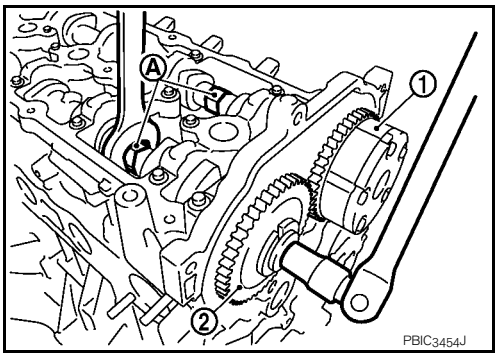

5. Remove camshaft bracket with the following procedure:

a. Loosen mounting bolts in reverse order as shown in the figure.

⇦ : Engine front

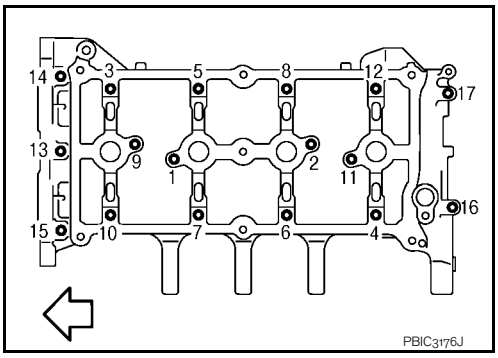

b. Cut liquid gasket by prying the position (⬅) shown in the figure, and then remove the camshaft bracket.

⇦ : Engine front

CAUTION:
- **Be careful not to damage the mating surface.**
- **A more adhesive liquid gasket is applied compared to previous types when shipped, so it should not be forced off the position not specified.**

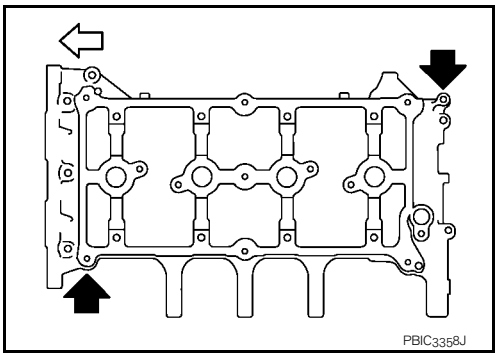

6. Remove camshafts.
7. Remove valve lifters.
- Identify installation positions, and store them without mixing them up.

cardiagn.com

8. Remove signal plate from camshaft (INT), if necessary.

INSTALLATION

1. Install valve lifters.
   - Install them in the original positions.
2. Install camshafts.
   - Clean camshaft journal to remove any foreign material.
   - Distinguish between the intake and the exhaust by looking at the different shapes of the front and rear ends of the camshaft or using the identification colors (A) and (B).

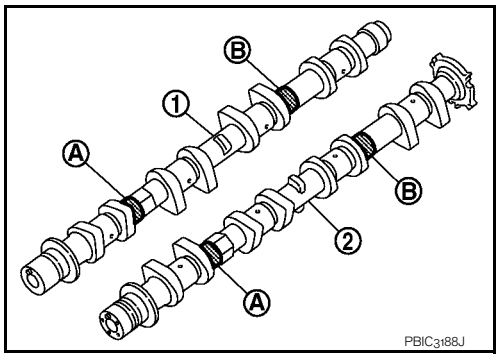

1 : Camshaft (EXH)
2 : Camshaft (INT)

Identification color	A	B
Camshaft (EXH)	—	White
Camshaft (INT)	White	—

   - Install camshafts so that camshaft dowel pins (A) on the front side are positioned as shown in the figure.

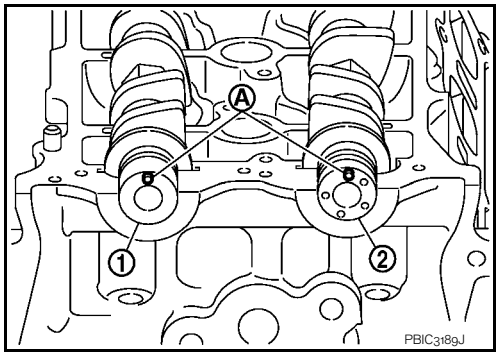

1 : Camshaft (EXH)
2 : Camshaft (INT)

NOTE:
Though camshaft does not stop at the positions as shown in the figure, for the placement of cam nose, it is generally accepted camshaft is placed for the same direction of the figure.

3. Install camshaft bracket with the following procedure:

a. Remove foreign material completely from camshaft bracket backside and from cylinder head installation face.

b. Apply liquid gasket (A) to camshaft bracket as shown in the figure.

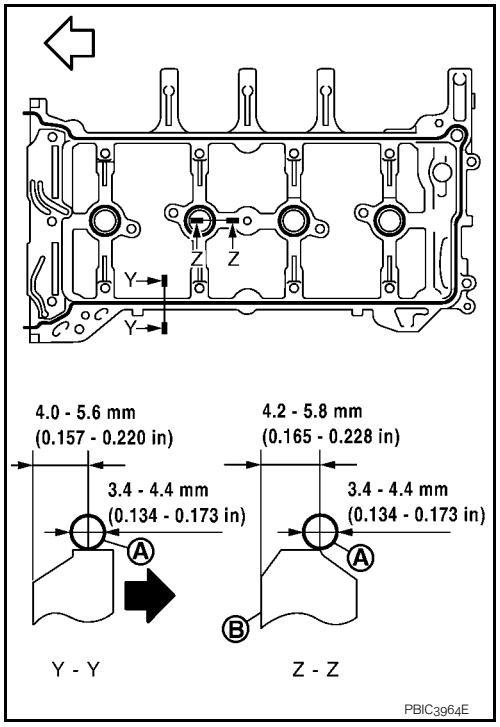

B : Plug hole inner wall
⇦ : Engine front
⬅ : Engine outside

Use Genuine Liquid Gasket or equivalent.

cardiagn.com

c. Tighten mounting bolts of camshaft brackets in the following steps, in numerical order as shown in the figure.

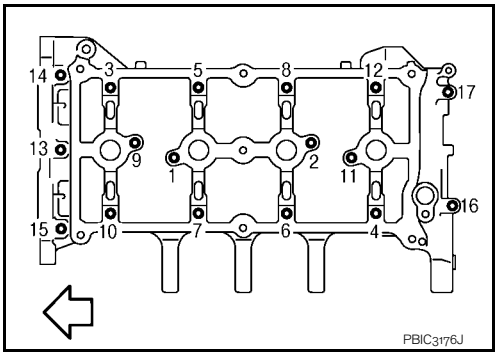

⇦ : Engine front

- There are two types of mounting bolts. Refer to the following for locating bolts.

M6 bolts [thread length: 57.5 mm (2.264 in)]
: 13, 14 and 15 in the figure
M6 bolts [thread length: 35.00 mm (1.378 in)]
: Except the above

i. Tighten mounting bolts in numerical order.

: 1.96 N·m (0.20 kg-m, 17 in-lb)

ii. Tighten mounting bolts in numerical order.

: 5.88 N·m (0.60 kg-m, 52 in-lb)

iii. Tighten mounting bolts in numerical order.

: 9.5 N·m (0.97 kg-m, 84 in-lb)

CAUTION:
After tightening mounting bolts of camshaft brackets, be sure to wipe off excessive liquid gasket from the mating surface of cylinder head.

4. Install the camshaft sprocket (INT) to the camshaft (INT) with the following procedure.

a. When the camshaft sprocket (INT) (2) is removed, refer to the paint mark (A) put according to step “3”. Securely align the knock pin and the pin hole, and then install them.

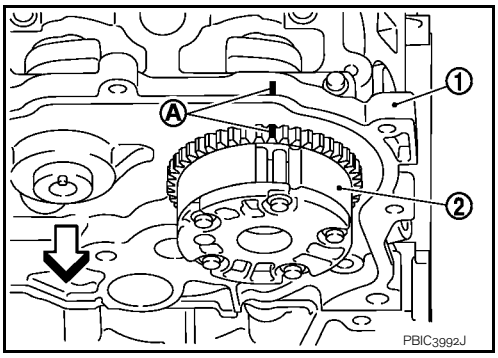

1 : Camshaft bracket
⇦ : Engine front

b. Tighten bolts in the following steps.
- Secure the hexagonal part of camshaft (INT) using wrench to tighten mounting bolt.

i. Tighten camshaft (INT) mounting bolt.

: 35.0 N·m (3.6 kg-m, 26 ft-lb)

ii. Turn 67 degrees clockwise (angle tightening).

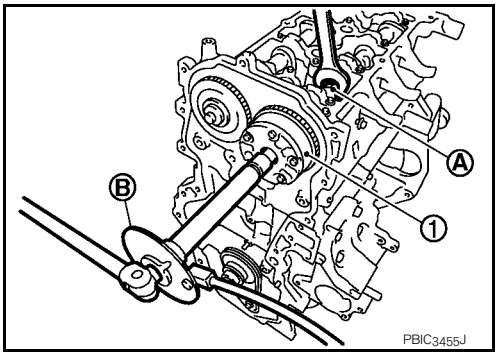

1 : Camshaft sprocket (INT)
A : Camshaft (INT) hexagonal part

CAUTION:
Check the tightening angle by using an angle wrench [SST: KV10112100] (B) or protractor. Never judge by visual inspection without an angle wrench.

cardiagn.com

5. Install camshaft sprocket (EXH) (2).

   1 : Camshaft sprocket (INT)

   - Secure the hexagonal part (A) of camshaft (EXH) using wrench to tighten mounting bolt.

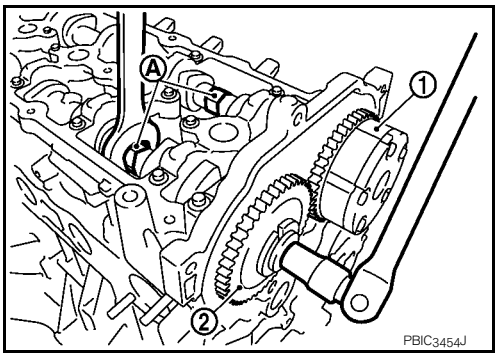

6. Install timing chain and related parts. Refer to EM-162, "Exploded View".
7. Inspect and adjust valve clearance. Refer to EM-139, "Inspection and Adjustment".
8. Install remaining parts in the reverse order of removal.

Inspection

INFOID:0000000000893952

INSPECTION AFTER REMOVAL

Camshaft Runout

1. Put V-block on a precise flat table, and support No. 2 and 5 journal of camshaft.
   CAUTION:
   Never support No. 1 journal (on the side of camshaft sprocket) because it has a different diameter from the other four locations.
2. Set dial indicator (A) vertically to No. 3 journal.
3. Turn camshaft to one direction with hands, and measure the camshaft runout on dial indicator. (Total indicator reading)

   Standard and Limit : Refer to EM-237, "Camshaft".

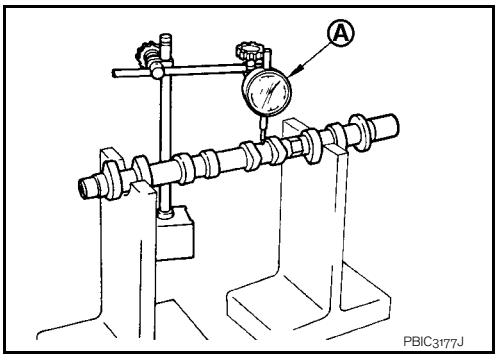

4. If it exceeds the limit, replace camshaft.

Camshaft Cam Height

1. Measure the camshaft cam height with a micrometer (A).

   Standard and Limit : Refer to EM-237, "Camshaft".

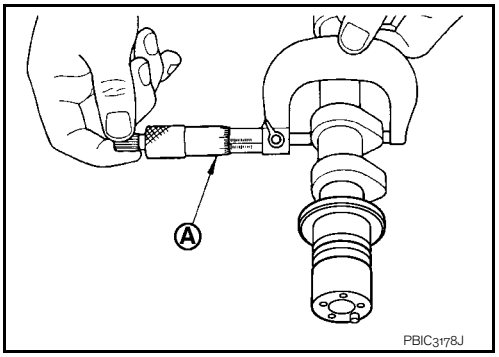

2. If it exceeds the limit, replace camshaft.

Camshaft Journal Oil Clearance

CAMSHAFT JOURNAL OUTER DIAMETER

cardiagn.com

Measure the outer diameter of camshaft journal with a micrometer (A).

Standard : Refer to EM-237, "Camshaft".

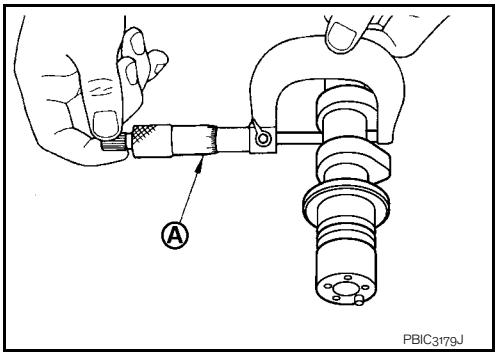

CAMSHAFT BRACKET INNER DIAMETER

- Tighten camshaft bracket bolts with specified torque. Refer to EM-173, "Removal and Installation".
- Measure the inner diameter of camshaft bracket with a bore gauge (A).

B : Measuring direction of inner diameter

Standard : Refer to EM-237, "Camshaft".

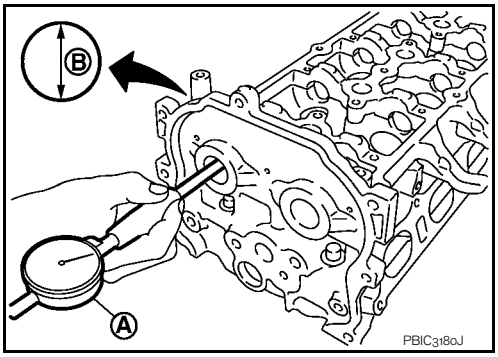

CAMSHAFT JOURNAL OIL CLEARANCE

- (Oil clearance) = (Camshaft bracket inner diameter) – (Camshaft journal diameter)

Standard and Limit : Refer to EM-237, "Camshaft".

- If it exceeds the limit, replace camshaft or cylinder head, or both.
  NOTE:
  Camshaft bracket cannot be replaced as a single part, because it is machined together with cylinder head. Replace whole cylinder head assembly.

Camshaft End Play

1. Install camshaft in cylinder head. Refer to EM-173, "Removal and Installation".
2. Install dial indicator in thrust direction on front end of camshaft. Read the end play of dial indicator (A) when camshaft is moved forward/backward (in direction to axis).

Standard and Limit : Refer to EM-237, "Camshaft".

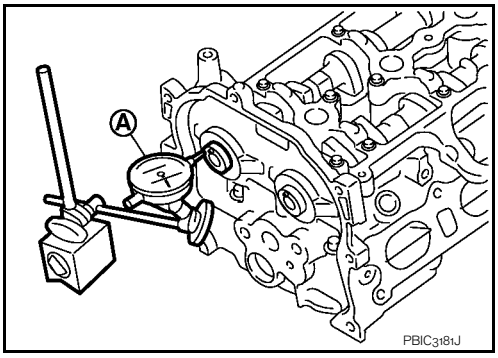

cardiagn.com

- Measure the following parts if out of the standard.
  - Dimension “A” for groove of cylinder head No. 1 journal

    Standard : 4.000 - 4.030 mm (0.1575 - 0.1587 in)

  - Dimension “B” for camshaft flange

    Standard : 3.877 - 3.925 mm (0.1526 - 0.1545 in)

- Refer to the standards above, and then replace camshaft and/ or cylinder head.

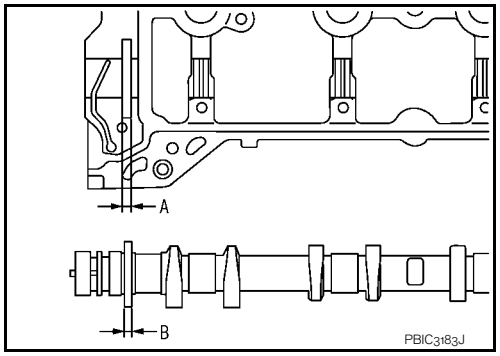

Camshaft Sprocket Runout

1. Put V-block on precise flat table, and support No. 2 and 5 journals of camshaft.
   CAUTION:
   Never support No. 1 journal (on the side of camshaft sprocket) because it has a different diameter from the other four locations.
2. Measure the camshaft sprocket runout with a dial indicator (A). (Total indicator reading)

   Limit : Refer to EM-237, "Camshaft".

- If it exceeds the limit, replace camshaft sprocket.

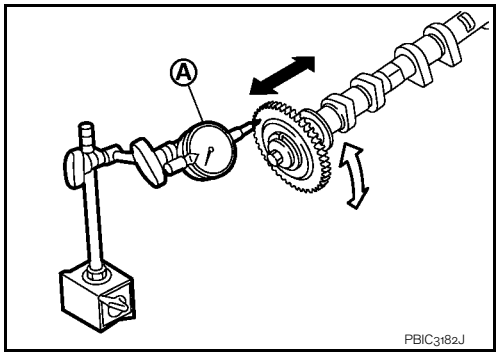

Valve Lifter

Check if surface of valve lifter has any wear or cracks.

- If anything above is found, replace valve lifter. Refer to EM-237, "Camshaft".

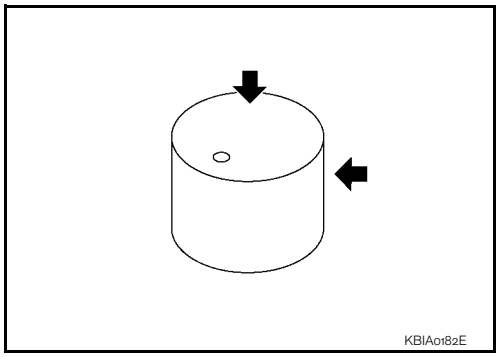

Valve Lifter Clearance

VALVE LIFTER OUTER DIAMETER

- Measure the outer diameter of valve lifter with a micrometer (A).

  Standard : Refer to EM-237, "Camshaft".

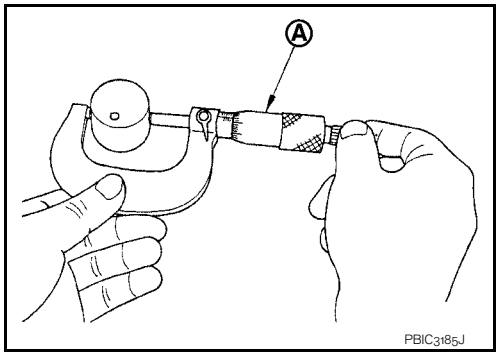

VALVE LIFTER HOLE DIAMETER

cardiagn.com

Measure the diameter of valve lifter hole of cylinder head with an inside micrometer (A).

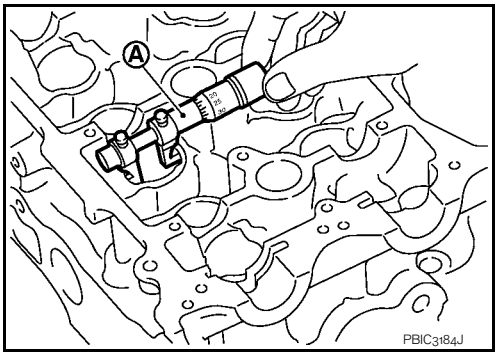

Standard : Refer to EM-237, "Camshaft".

VALVE LIFTER CLEARANCE

- (Valve lifter clearance) = (Valve lifter hole diameter) – (Valve lifter outer diameter)

Standard : Refer to EM-237, "Camshaft".

- If out of the standard, referring to the each standard of valve lifter outer diameter and valve lifter hole diameter, replace either or both valve lifter and cylinder head.

INSPECTION AFTER INSTALLATION

Inspection of Camshaft Sprocket (INT) Oil Groove

CAUTION:

- **Perform this inspection only when DTC P0011 is detected in self-diagnostic results of CONSULT-III and it is directed according to inspection procedure of EC section. Refer to EC-706, "Diagnosis Description".**
- **Check when engine is cold so as to prevent burns by the splashing engine oil.**

1. Check engine oil level. Refer to LU-14, "Inspection".
2. Perform the following procedure so as to prevent the engine from being unintentionally started while checking.

a. Release the fuel pressure. Refer to EC-978, "Inspection".
b. Remove intake manifold. Refer to EM-146, "Exploded View".
c. Disconnect ignition coil and injector harness connectors.

3. Remove intake valve timing control solenoid valve. Refer to EM-162, "Exploded View".
4. Clean the mounting area of intake valve timing control solenoid valve, and then insert a clean waste with no oil adhesion into the oil hole (A) of the cylinder head.

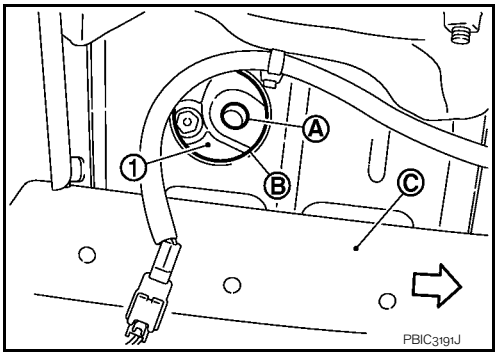

1	: Front cover
B	: Service hole
C	: Member on RH side
⇦	:Engine front

5. Install engine mounting insulator (RH). (After the removal of intake valve timing control solenoid valve and insertion of a waste into the oil hole.)
6. Perform cranking to check that engine oil comes out from the oil hole (mounting hole of intake valve timing control solenoid valve) of cylinder head.
   - Regarding the engine oil check, judge it by the amount of oil adhered to the wasted inserted into the oil hole.

   WARNING:
   - **Never insert fingers into the oil hole from the service hole of the member on the RH side.**
   - **Be careful not to touch rotating parts (drive belt, idler pulleys and crankshaft pulley, etc.).**

   CAUTION:
   - **Never perform cranking without installing the engine mounting insulator (RH).**
   - **Prevent splashing by using a shop cloth so as to prevent the worker from injury from engine oil and so as to prevent engine oil contamination.**
   - **Prevent splashing by using a shop cloth so as to prevent engine oil from being splashed to engine and vehicle. Especially, be careful not to apply engine oil to rubber parts of drive belt, engine mounting insulator, etc. Wipe engine oil off immediately if it is splashed.**
7. Perform the following inspection if engine oil does not come out from intake valve timing control solenoid valve oil hole of the cylinder head.

cardiagn.com

- Remove oil filter (for intake valve timing control solenoid), and then clean it. Refer to EM-162, "Exploded View".
- Clean oil groove between oil strainer and intake valve timing control solenoid valve. Refer to LU-11, "Engine Lubrication System" and LU-11, "Engine Lubrication System Schematic".

8. Remove components between intake valve timing control solenoid valve and camshaft sprocket (INT), and then check each oil groove for clogging.
   - Clean oil groove if necessary. Refer to LU-11, "Engine Lubrication System" and LU-11, "Engine Lubrication System Schematic".
9. After inspection, install removed parts in the reverse order.

cardiagn.com

OIL SEAL

VALVE OIL SEAL

VALVE OIL SEAL : Removal and Installation

INFOID:0000000000893953

REMOVAL

1. Remove camshafts. Refer to EM-173, "Exploded View".
2. Remove valve lifters. Refer to EM-173, "Exploded View".
3. Rotate crankshaft, and set piston whose valve oil seal is to be removed to TDC. This will prevent valve from dropping into cylinder.
   CAUTION:
   When rotating crankshaft, be careful to avoid scarring front cover with timing chain.
4. Remove valve collet.
   - Compress valve spring with the valve spring compressor, the attachment and the adapter [SST: KV10116200] (A).
   CAUTION:
   Be careful not to damage valve lifter holes.

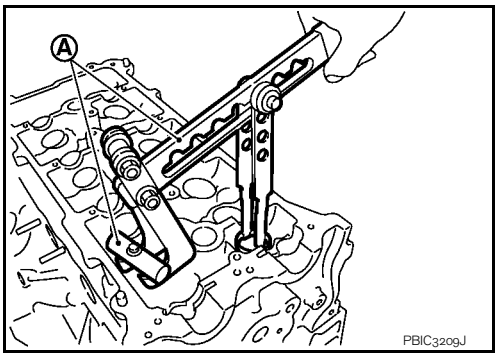

5. Remove valve spring retainer, valve spring and valve spring seat.
6. Remove valve oil seal with the valve oil seal puller [SST: KV10107902] (A).

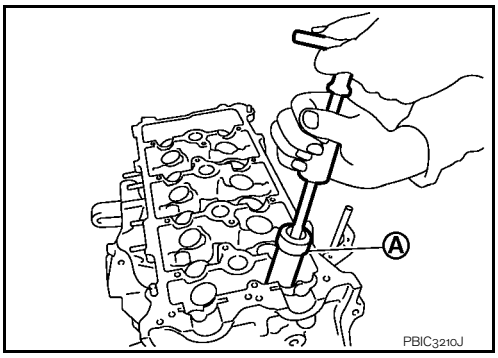

INSTALLATION

1. Apply new engine oil to valve oil seal joint surface and seal lip.
2. Press in valve oil seal to the height “H” shown in the figure with the valve oil seal drift [SST: KV10115600] (A).

   Height “H” : 15.1 - 15.7 mm (0.594 - 0.618 in)

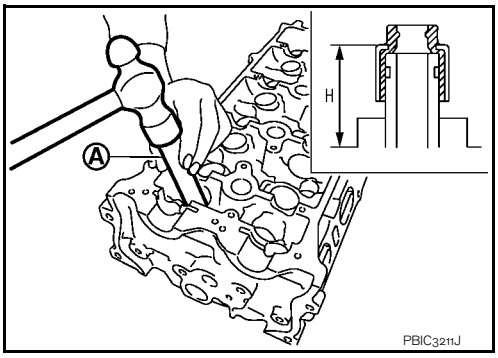

3. Install in the reverse order of removal, for the rest of parts.

FRONT OIL SEAL

FRONT OIL SEAL : Removal and Installation

INFOID:0000000000893954

cardiagn.com

REMOVAL

1. Remove the following parts.
   - Front fender protector (RH): Refer to EXT-21, "Exploded View".
   - Drive belt: Refer to EM-134, "Exploded View".
   - Crankshaft pulley: Refer to EM-162, "Exploded View".
2. Remove front oil seal with a suitable tool.
   CAUTION:
   Be careful not to damage front cover and crankshaft.

INSTALLATION

1. Apply new engine oil to new front oil seal joint surface and seal lip.
2. Install front oil seal so that each seal lip is oriented as shown in the figure.

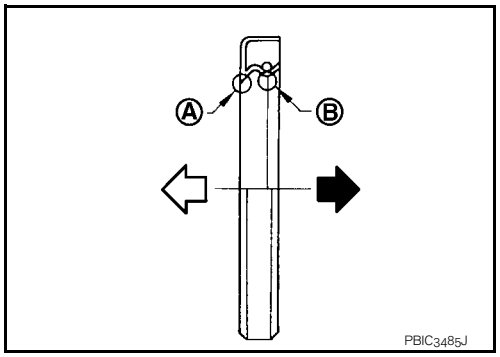

   A : Dust seal lip
   B : Oil seal lip
   ⇦ : Engine outside
   ⬅ : Engine inside

   - Press-fit front oil seal using a suitable drift with outer diameter 57 mm (2.24 in) and inner diameter 45 mm (1.77 in).

   Within 0.3 mm (0.012 in) toward engine front (crankshaft pulley side)
   Within 0.5 mm (0.020 in) toward engine rear (crankshaft sprocket side)

   CAUTION:
   - **Be careful not to damage front cover and crankshaft.**
   - **Press-fit oil seal straight to avoid causing burrs or tilting.**

3. Install in the reverse order of removal, for the rest of parts.

REAR OIL SEAL

REAR OIL SEAL : Removal and Installation

INFOID:0000000000893955

REMOVAL

1. Remove transaxle assembly. Refer to TM-68, "Exploded View" or TM-123, "Exploded View" (M/T models) or TM-351, "2WD : Exploded View" or TM-354, "4WD : Exploded View" (CVT models).
2. Remove clutch cover and clutch disk (M/T models). Refer to CL-16, "HR16DE, MR20DE : Exploded View".
3. Remove drive plate (CVT models) or flywheel (M/T models). Refer to EM-210, "Exploded View".
4. Remove rear oil seal with a suitable tool.
   CAUTION:
   Be careful not to damage crankshaft and cylinder block.

INSTALLATION

1. Apply the liquid gasket lightly to entire outside area of new rear oil seal.
   Use Genuine Liquid Gasket or equivalent.

cardiagn.com

2. Install rear oil seal so that each seal lip is oriented as shown in the figure.

A : Dust seal lip
B : Oil seal lip
⇦ : Engine outside
⬅ : Engine inside

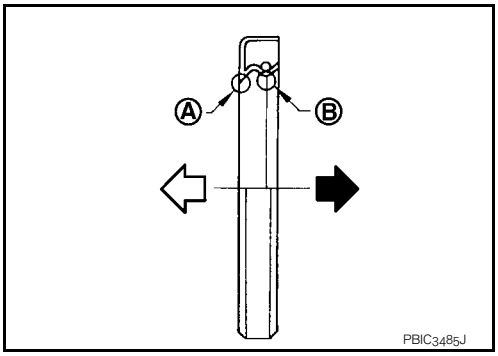

- Press-fit rear oil seal with a suitable drift outer diameter 113 mm (4.45 in) and inner diameter 90 mm (3.54 in) (A).
  CAUTION:
  - **Be careful not to damage crankshaft and cylinder block.**
  - **Press-fit oil seal straight to avoid causing burrs or tilting.**
  - **Never touch grease applied onto oil seal lip.**

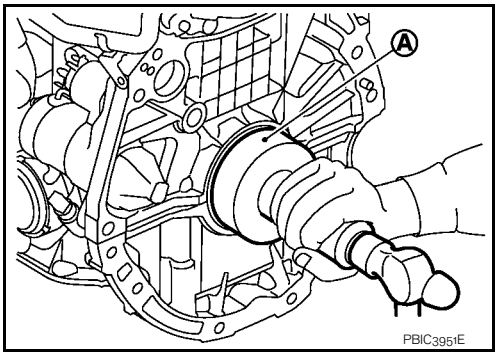

- Press in rear oil seal (1) to the position as shown in the figure.

A : Rear end surface of cylinder block

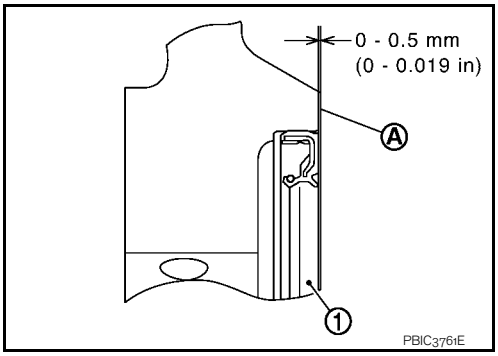

3. Install in the reverse order of removal, for the rest of parts.

cardiagn.com

CYLINDER HEAD

Exploded View

INFOID:0000000000893956

REMOVAL

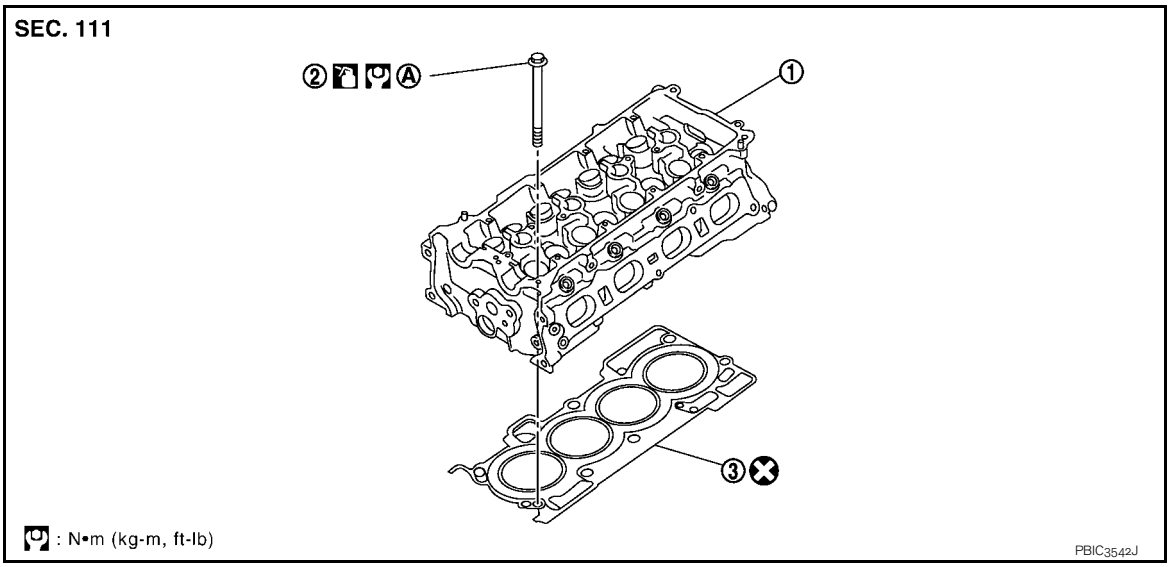

1. Cylinder head assembly
2. Cylinder head bolt
3. Cylinder head gasket

A. Refer to EM-186

Refer to GI-4, "Components" for symbols in the figure.

DISSASEMBLY

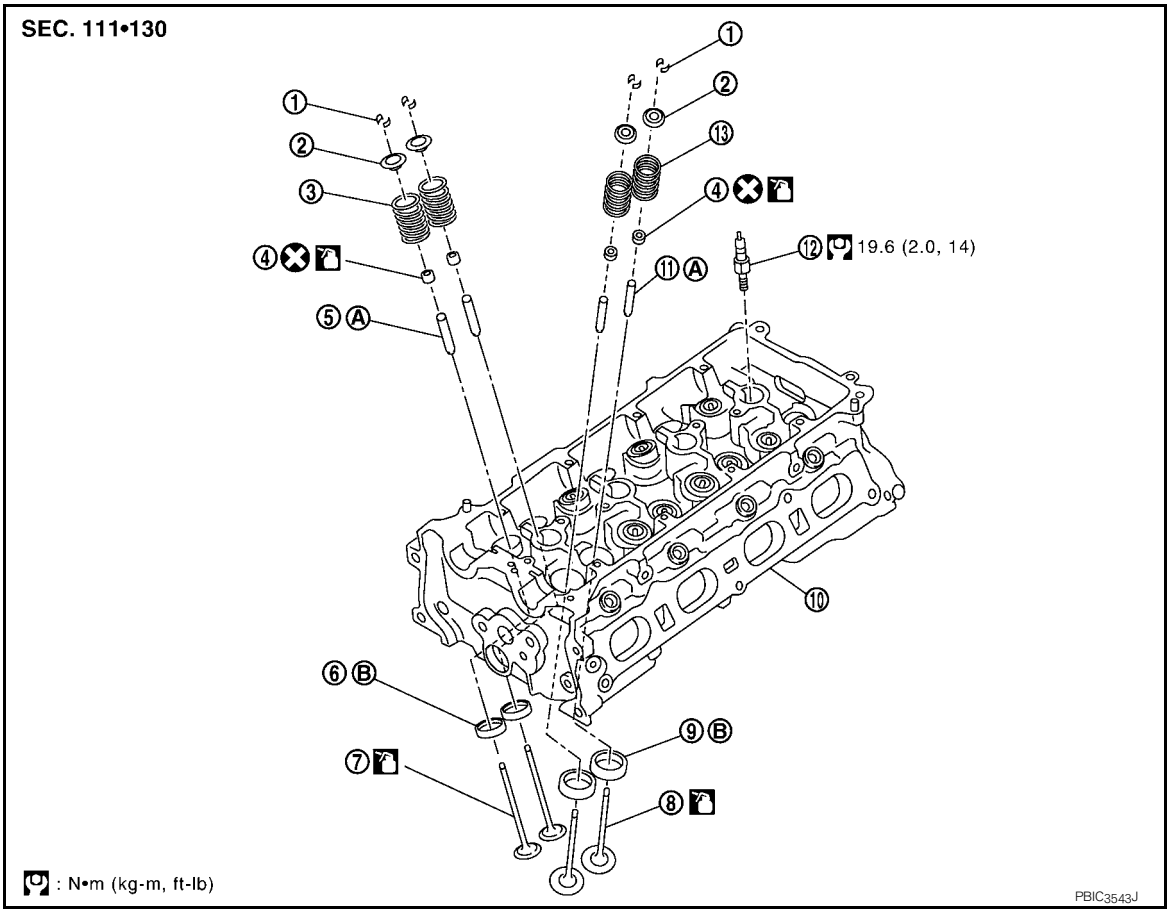

cardiagn.com

1. Valve collet	2. Valve spring retainer	3. Valve spring (EXH) (with valve spring seat)
4. Valve oil seal	5. Valve guide (EXH)	6. Valve seat (EXH)
7. Valve (EXH)	8. Valve (INT)	9. Valve seat (INT)
10. Cylinder head	11. Valve guide (INT)	12. Spark plug
13. Valve spring (INT) (with valve spring seat)		
A. Refer to EM-187	B. Refer to EM-187	

Refer to GI-4, "Components" for symbols shown in the figure.

Removal and Installation

INFOID:0000000000893957

REMOVAL

1. Release fuel pressure. Refer to EC-978, "Inspection".
2. Drain engine coolant and engine oil. Refer to CO-30, "Draining" and LU-15, "Draining".
3. Remove the following components and related parts.
   - Exhaust manifold: Refer to EM-149, "Exploded View".
   - Intake manifold: Refer to EM-146, "Exploded View".
   - Fuel tube and fuel injector assembly: Refer to EM-155, "Exploded View".
   - Water outlet: Refer to CO-44, "Exploded View".
   - Rocker cover: Refer to EM-160, "Exploded View".
   - Front cover, timing chain: Refer to EM-162, "Exploded View".
   - Camshaft: Refer to EM-173, "Exploded View".
4. Remove cylinder head.
   - Loosen mounting bolts in reverse order as shown in the figure.

     ⇦ : Engine front

   - Using TORX socket (size E18), loosen cylinder head bolts.

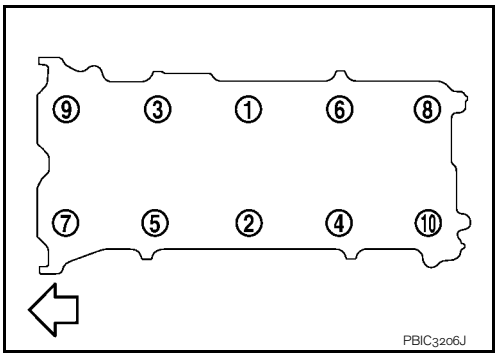

5. Remove cylinder head gasket.

INSTALLATION

1. Install cylinder head gasket.
2. Install cylinder head, and tighten cylinder head bolts in numerical order as shown in figure with the following procedure.

   ⇦ : Engine front

   CAUTION:
   If cylinder head bolts are re-used, check their outer diameters before installation. Refer to EM-191, "Inspection".

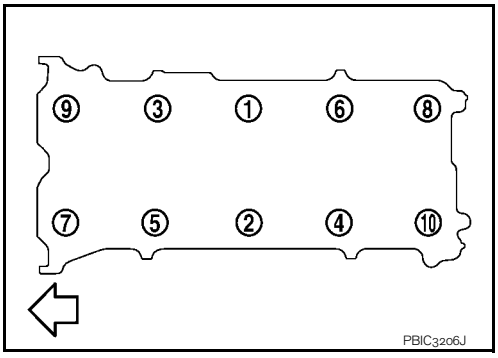

a. Apply new engine oil to threads and seating surface of mounting bolts.
b. Tighten all bolts.

   : 40.0 N·m (4.1 kg-m, 30 ft-lb)

cardiagn.com

c. Turn all bolts 100 degrees clockwise (angle tightening).
CAUTION:
Check and confirm the tightening angle by using an angle wrench [SST: KV10112100] (A) or protractor. Never judge by visual inspection without the tool.

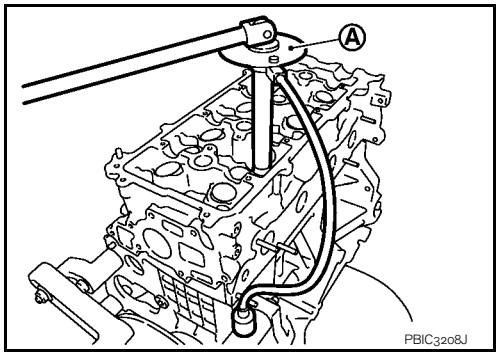

d. Completely loosen.

: 0 N·m (0 kg-m, 0 ft-lb)

CAUTION:
In this step, loosen bolts in reverse order that indicated in the figure.

e. Tighten all bolts.

: 40.0 N·m (4.1 kg-m, 30 ft-lb)

f. Turn all bolts 100 degrees clockwise (angle tightening).
g. Turn all bolts 100 degrees clockwise again (angle tightening).
3. Install in the reverse order of removal, for the rest of parts.

Disassembly and Assembly

INFOID:0000000000893967

Disassembly

1. Remove spark plug with spark plug wrench (commercial service tool).
2. Remove valve lifter.
   - Identify installation positions, and store them without mixing them up.
3. Remove valve collet.
   - Compress valve spring with valve spring compressor, attachment and adapter [SST: KV10116200] (A). Remove valve collet with a magnet hand.

   CAUTION:
   Be careful not to damage valve lifter holes.

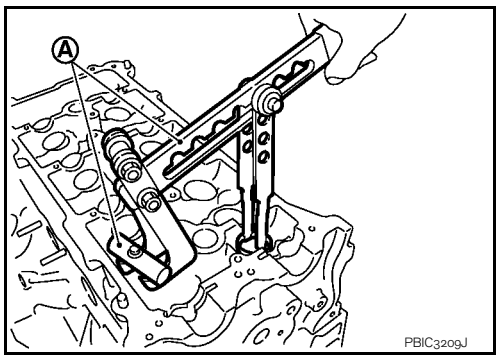

4. Remove valve spring retainer and valve spring (with valve spring seat).
   CAUTION:
   Never remove valve spring seat from valve spring.
5. Push valve stem to combustion chamber side, and remove valve.
   - Identify installation positions, and store them without mixing them up.
6. Remove valve oil seal with a valve oil seal puller [SST: KV10107902] (A).

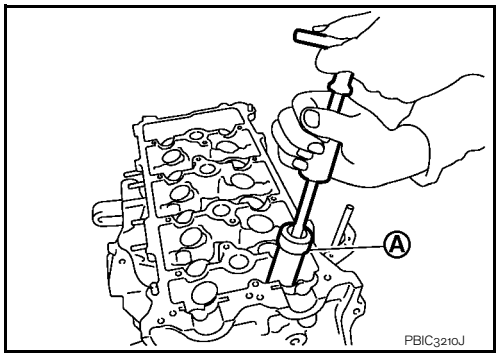

7. When valve seat must be replaced.

cardiagn.com

- Bore out old seat until it collapses. Boring should not continue beyond the bottom face of the seat recess in cylinder head. Set the machine depth stop to ensure this. Refer to EM-238, "Cylinder Head".
  CAUTION:
  Never bore excessively to prevent cylinder head from scratching.

8. When valve guide must be replaced.

a. To remove valve guide, heat cylinder head to 110 to 130°C (230 to 266°F) by soaking in heated oil (A).

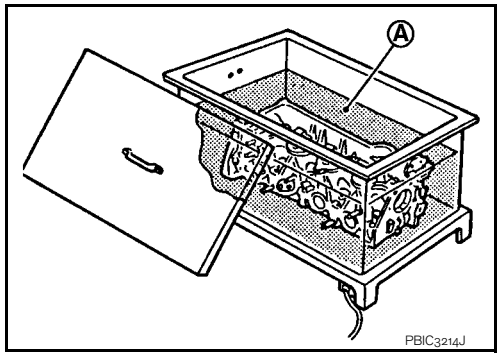

b. Drive out valve guide with a hammer and valve guide drift (commercial service tool).
CAUTION:
Cylinder head contains heat, wear protective equipment to avoid getting burned.

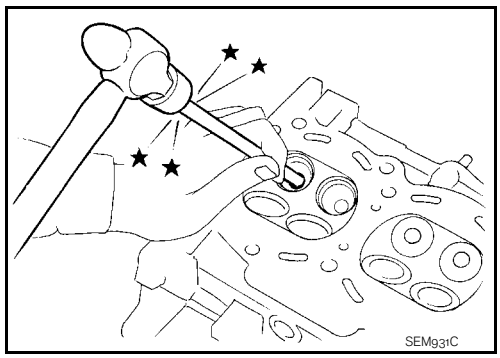

Assembly

1. When valve guide is removed, install it.
CAUTION:
Replace with oversize [0.2 mm (0.008 in)] valve guide.

a. Ream cylinder head valve guide hole with a valve guide reamer (commercial service tool) (A).

For service parts: Oversize [0.2 mm (0.008 in)]
Refer to EM-238, "Cylinder Head".

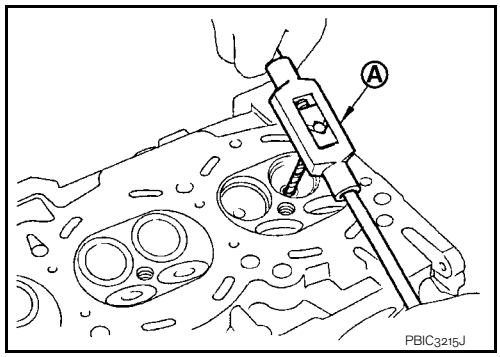

b. Heat cylinder head to 110 to 130°C (230 to 266°F) by soaking in heated oil (A).

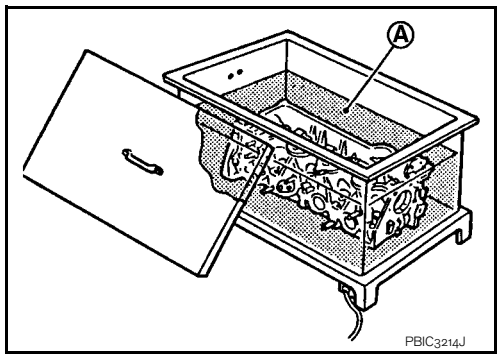

cardiagn.com

c. Press valve guide (1) from camshaft side to dimensions as shown in the figure.

2 : Cylinder head

Projection "H" : Refer to EM-238, "Cylinder Head".

CAUTION:
Cylinder head contains heat, wear protective equipment to avoid getting burned.

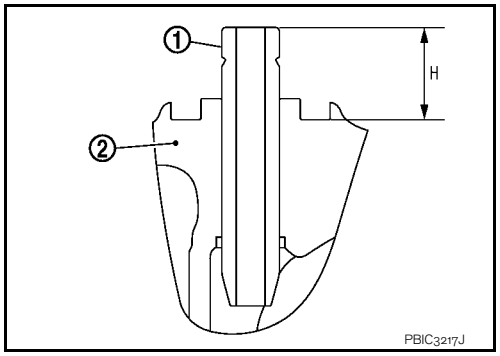

d. Apply reamer finish to valve guide with a valve guide reamer (commercial service tool) (A).

Standard : Refer to EM-238, "Cylinder Head".

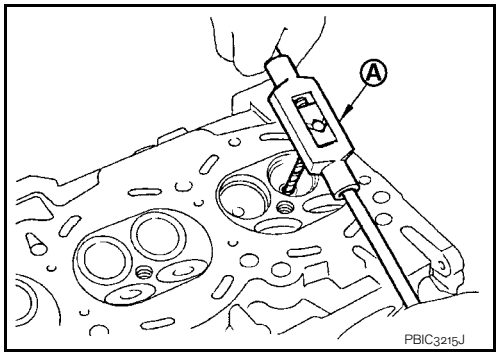

2. When valve seat is removed, install it.
CAUTION:
Replace with oversize [0.5 mm (0.020 in)] valve seat.

a. Ream cylinder head (1) recess diameter for service valve seat.

2 : Valve seat

For service parts: Oversize [0.5 mm (0.020 in)]
Refer to EM-238, "Cylinder Head".

- Be sure to ream in circles concentric to the valve guide center. This will enable valve seat to fit correctly.

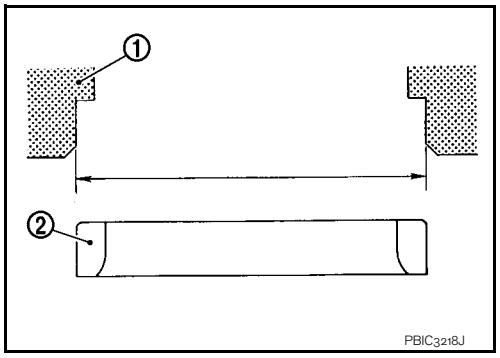

b. Heat cylinder head to 110 to 130°C (230 to 266°F) by soaking in heated oil (A).

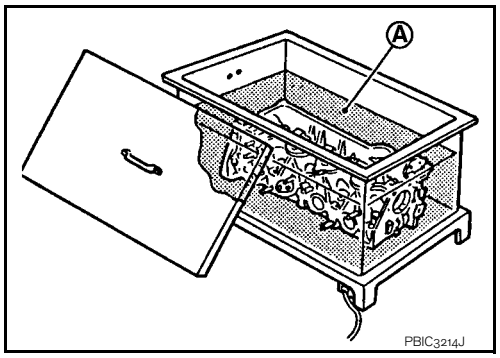

c. Provide valve seats cooled well with dry ice. Press-fit valve seat into cylinder head.
CAUTION:
- **Never touch cold valve seats directly.**
- **Cylinder head contains heat, wear protective equipment to avoid getting burned.**

cardiagn.com

d. Using valve seat cutter set (commercial service tool) or valve seat grinder, finish valve seat to the specified dimensions. For dimensions, refer to EM-238, "Cylinder Head".

CAUTION:

When using valve seat cutter, firmly grip the cutter handle with both hands. Then, press on the contacting surface all around the circumference to cut in a single drive. Improper pressure on with the cutter or cutting many different times may result in stage valve seat.

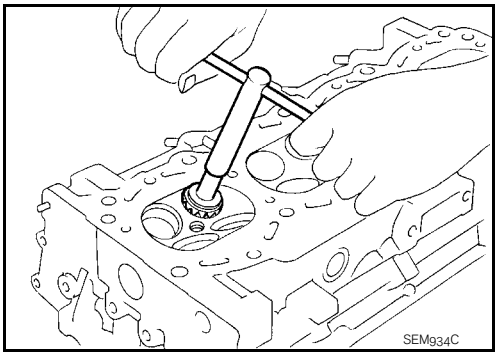

e. Using compound, grind to adjust valve fitting.

f. Check again for normal contact. Refer to EM-191, "Inspection".

3. Install valve oil seal.
   - Install with a valve oil seal drift [SST:KV10115600] (A) to match dimension in the figure.

     NOTE:

     Dimension “H” is height that measured before installing valve spring (with valve spring seat).

     Height “H” : 15.1 - 15.7 mm (0.594 - 0.618 in)

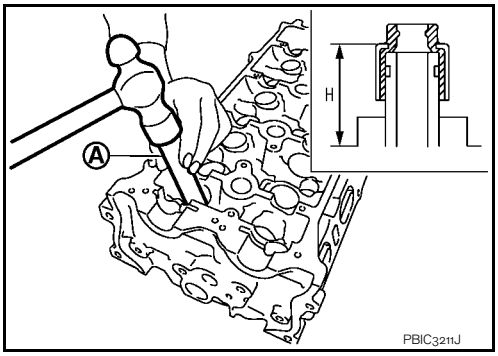

4. Install valve.
   - Install larger diameter to intake side.

5. Install valve spring (with valve spring seat).
   - Install smaller pitch (valve spring seat side) to cylinder head side (B).

     1 : Valve spring seat (Do not remove from valve spring.)

   - Confirm identification color (A) of valve spring.

     Intake : Green

     Exhaust : Purple

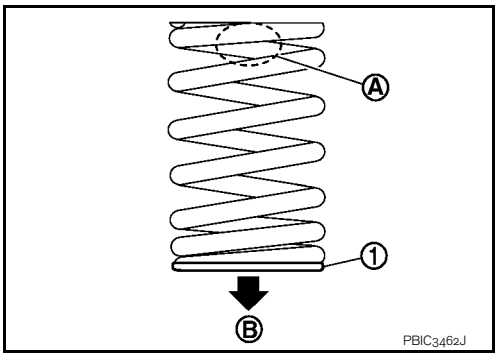

6. Install valve spring retainer.

7. Install valve collet.
   - Compress valve spring with a valve spring compressor, attachment and adapter [SST: KV10116200] (A). Install valve collet with a magnet hand.

     CAUTION:

     Be careful not to damage valve lifter holes.

   - Tap valve stem edge lightly with a plastic hammer after installation to check its installed condition.

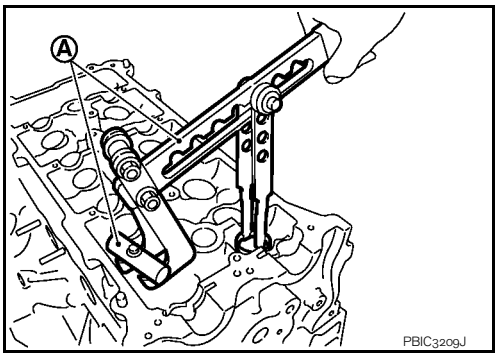

8. Install valve lifter.
   - Install it in the original position.

cardiagn.com

9. Install spark plug with spark plug wrench (commercial service tool).

Inspection

INFOID:0000000000893958

INSPECTION AFTER REMOVAL

Cylinder Head Bolts Outer Diameter

- Cylinder head bolts are tightened by plastic zone tightening method. Whenever the size difference between “d1” and “d2” exceeds the limit, replace them with a new one.

Limit (“d1”–“d2”): 0.15 mm (0.0059 in)

- If reduction of outer diameter appears in a position other than “d2”, use it as “d2” point.

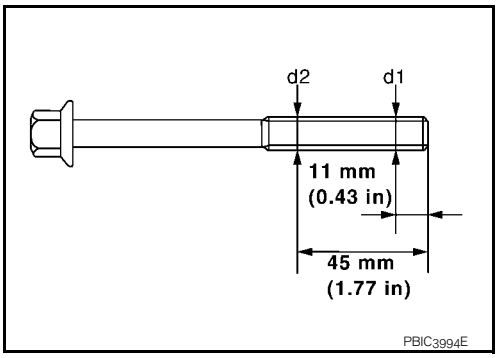

Cylinder Head Distortion

NOTE:

When performing this inspection, cylinder block distortion should be also checked. Refer to EM-241, "Cylinder Block".

1. Wipe off engine oil and remove water scale (like deposit), gasket, sealant, carbon, etc. with a scraper.
   CAUTION:
   Never allow gasket debris to enter passages for engine oil or water.
2. At each of several locations on bottom surface of cylinder head, measure the distortion in six directions using straightedge (A) and feeler gauge (B).

Limit: Refer to EM-238, "Cylinder Head".

- If it exceeds the limit, replace cylinder head.

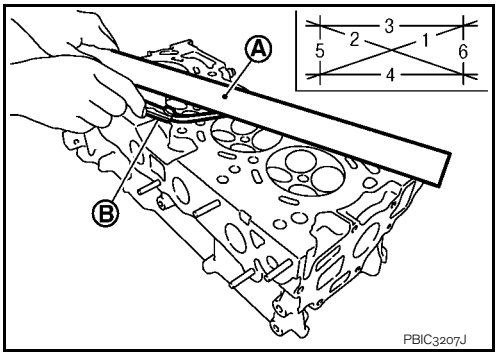

INSPECTION AFTER DISASSEMBLY

VALVE DIMENSIONS

- Check the dimensions of each valve. For the dimensions, refer to EM-238, "Cylinder Head".
- If dimensions are out of the standard, replace valve and check valve seat contact.

VALVE GUIDE CLEARANCE

Valve Stem Diameter

- Measure the diameter of valve stem with micrometer (A).

Standard : Refer to EM-238, "Cylinder Head".

Valve Guide Inner Diameter

- Measure the inner diameter of valve guide with bore gauge.

Standard : Refer to EM-238, "Cylinder Head".

Valve Guide Clearance

- (Valve guide clearance) = (Valve guide inner diameter) – (Valve stem diameter)

Standard and Limit : Refer to EM-238, "Cylinder Head".

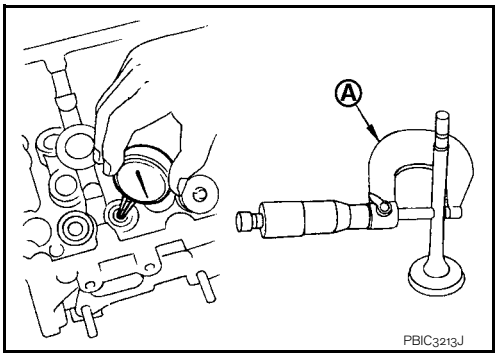

cardiagn.com

- If the calculated value exceeds the limit, replace valve and/or valve guide. When valve guide must be replaced. Refer to EM-187, "Disassembly and Assembly".

VALVE SEAT CONTACT

- After confirming that the dimensions of valve guides and valves are within the specifications, perform this procedure.
- Apply prussian blue (or white lead) onto contacting surface of valve seat to check the condition of the valve contact on the surface.
- Check if the contact area band is continuous all around the circumference.

A : OK
B : NG

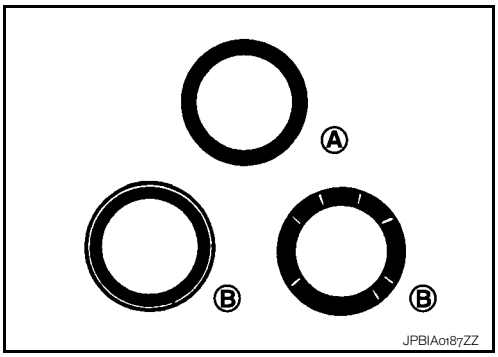

- If not, grind to adjust valve fitting and check again. If the contacting surface still has “NG” conditions even after the re-check, replace valve seat. Refer to EM-187, "Disassembly and Assembly".

VALVE SPRING SQUARENESS

- Set a try square (A) along the side of valve spring and rotate spring. Measure the maximum clearance between the top of spring and try square.

B : Contact

Limit : Refer to EM-238, "Cylinder Head".

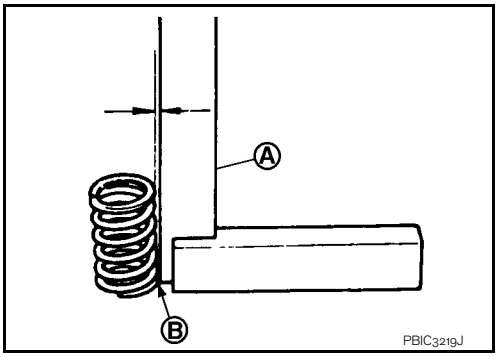

- If it exceeds the limit, replace valve spring.

VALVE SPRING DIMENSIONS AND VALVE SPRING PRESSURE LOAD

- Check valve spring pressure with valve spring seat installed at the specified spring height.
  CAUTION:
  Never remove valve spring seat from valve spring.

Standard : Refer to EM-238, "Cylinder Head".

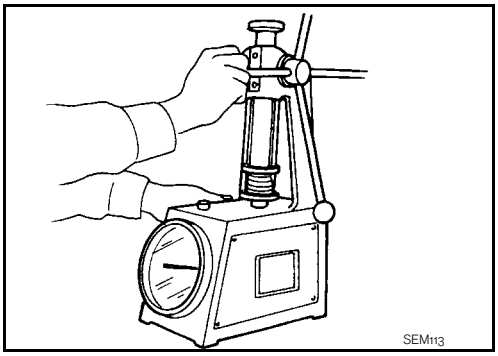

- If the installation load or load with valve open is out of the standard, replace valve spring (with valve spring seat).

INSPECTION AFTER INSTALLATION

Inspection for Leaks

- Before starting engine, check oil/fluid levels including engine coolant and engine oil. If less than required quantity, fill to the specified level. Refer to MA-21, "Fluids and Lubricants".
- Use procedure below to check for fuel leakage.
- Turn ignition switch “ON” (with engine stopped). With fuel pressure applied to fuel piping, check for fuel leakage at connection points.
- Start engine. With engine speed increased, check again for fuel leakage at connection points.
- Run engine to check for unusual noise and vibration.
- Warm up engine thoroughly to make sure there is no leakage of fuel, exhaust gases, or any oil/fluids including engine oil and engine coolant.
- Bleed air from lines and hoses of applicable lines, such as in cooling system.
- After cooling down engine, again check oil/fluid levels including engine oil and engine coolant. Refill to the specified level, if necessary.

cardiagn.com

Summary of the inspection items:

Item	Before starting engine	Engine running	After engine stopped
Engine coolant	Level	Leakage	Level
Engine oil	Level	Leakage	Level
Other oils and fluid*	Level	Leakage	Level
Fuel	Leakage	Leakage	Leakage
Exhaust gases	—	Leakage	—

* Transmission/transaxle/CVT fluid, power steering fluid, brake fluid, etc.

cardiagn.com

REMOVAL AND INSTALLATION

ENGINE ASSEMBLY

M/T

M/T : Exploded View

INFOID:0000000000893959

2WD models

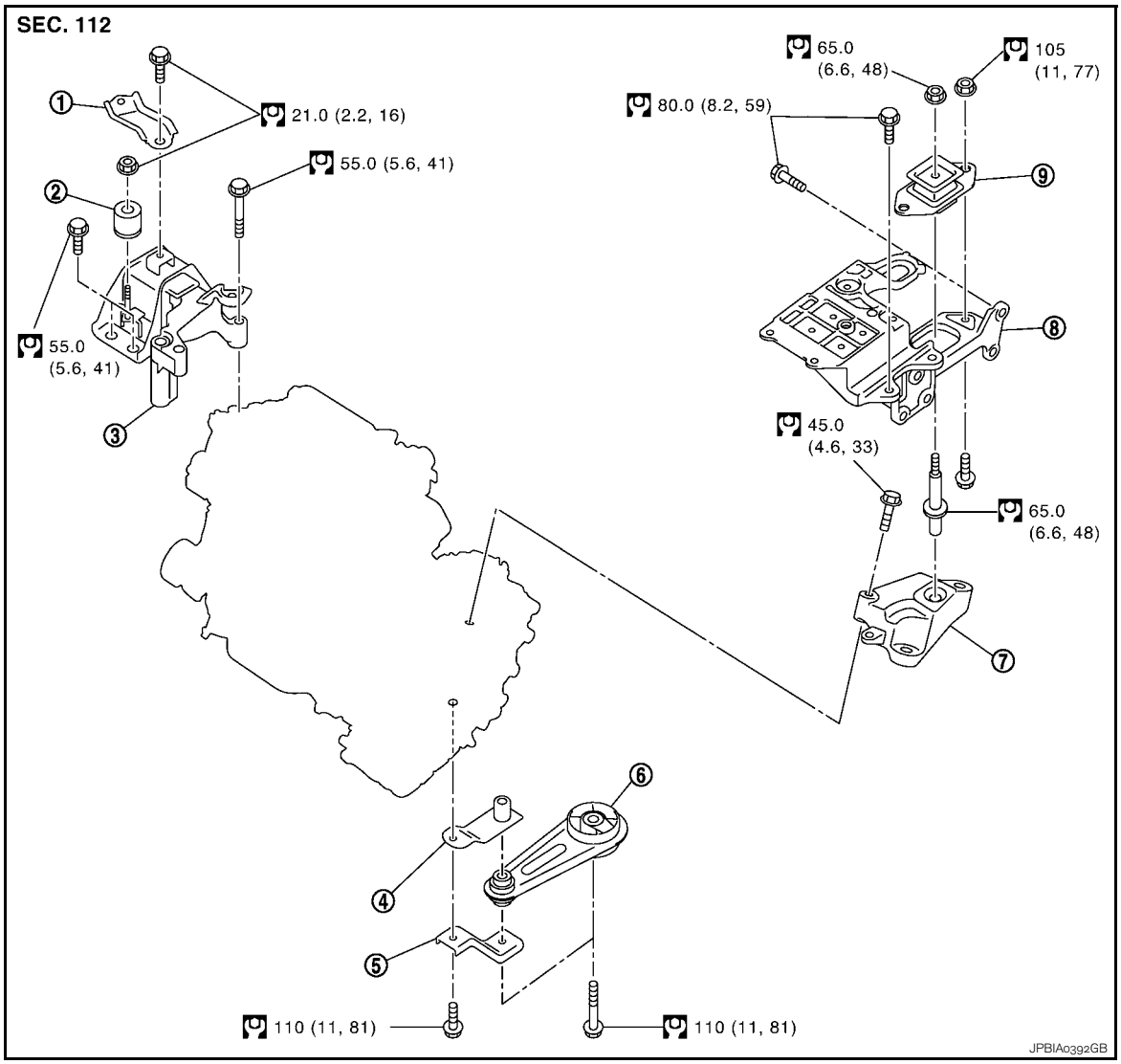

1. Engine mounting stay
2. Dynamic damper
3. Engine mounting insulator (RH)
4. Rear engine mounting bracket
5. Rear engine mounting bracket
6. Rear torque rod
7. Engine mounting bracket (LH)
8. Engine mounting bracket (LH)
9. Engine mounting insulator (LH)

Refer to GI-4, "Components" for symbols in the figure.

4WD models

cardiagn.com

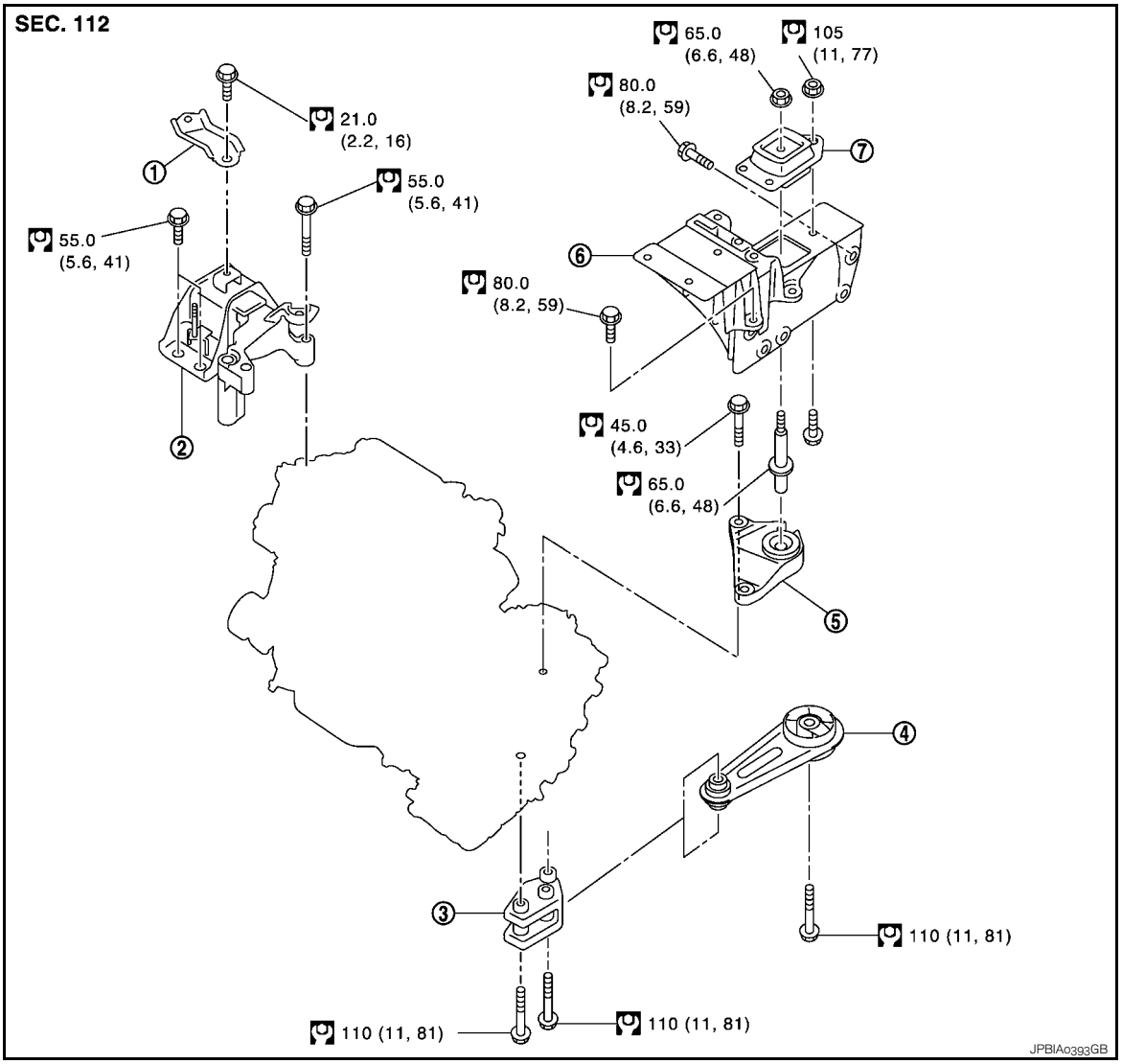

1. Engine mounting stay
2. Engine mounting insulator (RH)
3. Rear engine mounting bracket
4. Rear torque rod
5. Engine mounting bracket (LH)
6. Engine mounting bracket (LH)
7. Engine mounting insulator (LH)

Refer to GI-4, "Components" for symbols in the figure.

M/T : Removal and Installation

INFOID:0000000000893960

WARNING:
- **Situate the vehicle on a flat and solid surface.**
- **Place chocks at front and back of rear wheels.**
- **Attach proper slingers and bolts described in PARTS CATALOG if engine slingers are not equipped.**

CAUTION:
- **Always be careful to work safely, avoid forceful or uninstructed operations.**
- **Never start working until exhaust system and coolant are cool enough.**
- **If items or work required are not covered by the engine section, refer to the applicable sections.**
- **Always use the support point specified for lifting.**
- **Use either 2-pole lift type or separate type lift as best you can. If board-on type is used for unavoidable reasons, support at the rear axle jacking point with a transmission jack or similar tool before starting work, in preparation for the backward shift of center of gravity.**
- **For supporting points for lifting and jacking point at rear axle, refer to GI-33, "Garage Jack and Safety Stand and 2-Pole Lift".**

REMOVAL

cardiagn.com

Outline

Remove the engine and the transaxle assembly from the vehicle downward. Separate the engine and the transaxle.

Preparation

1. Release fuel pressure. Refer to EC-978, "Inspection".
2. Drain engine coolant from radiator. Refer to CO-30, "Draining".
   CAUTION:
   - **Perform this step when the engine is cold.**
   - **Never spill engine coolant on drive belt.**
3. Remove the following parts.
   - Engine undercover
   - Engine cover: Refer to EM-146, "Exploded View".
   - Front fender protector (RH and LH): Refer to EXT-21, "Exploded View".
   - Front road wheels and tires: Refer to WT-4, "Road Wheel".
   - Battery and battery tray: Refer to PG-118, "Exploded View".
   - Air duct and air cleaner case assembly: Refer to EM-144, "Exploded View".
   - Radiator hose (upper and lower) and cooling fan assembly: Refer to CO-34, "Exploded View".
   - Exhaust front tube: Refer to EX-10, "Exploded View".

Engine Room LH

1. Disconnect all connections of engine harness around the engine mounting insulator (LH), and then temporarily secure the engine harness into the engine side.
   CAUTION:
   Protect connectors using a resin bag against foreign materials during the operation.
2. Disconnect fuel feed hose at engine side. Refer to EM-155, "Exploded View".
3. Disconnect heater hoses. Refer to CO-44, "Exploded View".
4. Disconnect control linkage from transaxle. Refer to TM-63, "Exploded View".
5. Remove ground cable at transaxle side.

Engine Room RH

1. Disconnect vacuum hose from intake manifold. Refer to EM-146, "Exploded View".
2. Disconnect A/C piping from A/C compressor, and temporarily fasten it on vehicle with a rope (with A/C models). Refer to HA-39, "Exploded View".
3. Disconnect reservoir tank hoses. Refer to CO-34, "Exploded View".

Vehicle Underbody

1. Remove front wheel sensor (LH and RH) for ABS from steering knuckle. Refer to BRC-67, "FRONT WHEEL SENSOR : Exploded View".
2. Remove brake caliper assembly with piping connected from steering knuckle. Temporarily secure it on the vehicle side with a rope to avoid load on it. Refer to BR-37, "BRAKE CALIPER ASSEMBLY : Exploded View".
3. Disconnect steering outer sockets from steering knuckle. Refer to ST-13, "Exploded View".
4. Remove rear torque rod.
5. Remove drive shafts (LH and RH). Refer to FAX-15, "HR16DE MODELS : Exploded View" (2WD models) or FAX-55, "Exploded View" (4WD models).
6. Remove propeller shaft (4WD models). Refer to DLN-110, "Exploded View".
7. Remove stabilizer connecting rod. Refer to FSU-16, "Exploded View".
8. Disconnect steering lower joint at steering gear assembly side, and release steering lower shaft. Refer to ST-10, "Exploded View".
9. Remove front suspension member. Refer to FSU-16, "Exploded View".
10. Preparation for the separation work of transaxle is as follows:
    - Remove transaxle joint bolts which pierce at oil pan (upper) lower rear side. Refer to EM-152, "Exploded View".

Removal

cardiagn.com

1. Use a manual lift table caddy (commercial service tool) or equivalently rigid tool such as a transmission jack. Securely support bottom of the engine and the transaxle assembly.
   CAUTION:
   Put a piece of wood or an equivalent as the supporting surface, secure a completely stable condition.

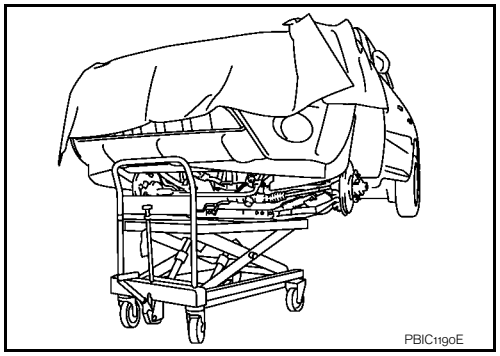

2. Remove engine mounting stay (1), engine mounting insulator (RH) (2).

   3 :Engine mounting insulator (LH)

3. Remove engine mounting through bolt-securing nut (A).

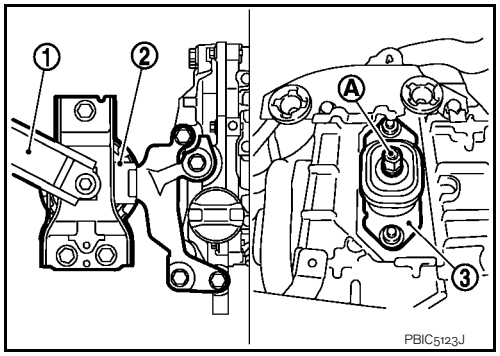

4. Carefully lower jack, or raise lift to remove the engine and the transaxle assembly. When performing work, observe the following caution.
   CAUTION:
   - **Make sure that no part interferes with the vehicle side.**
   - **Before and during this lifting, always check if any harnesses are left connected.**
   - **During the removal, always be careful to prevent the vehicle from falling off the lift due to changes in the center of gravity.**
   - **If necessary, support the vehicle by setting jack or suitable tool at the rear.**

Separation

1. Install engine slinger to front cover front left side and cylinder head rear right side.

   ⇦ : Engine front

   Slinger bolts
   Front cover side: **: 32.9 N·m (3.4 kg-m, 24 ft-lb)**
   Cylinder head side: **: 25.0 N·m (2.6 kg-m, 18 ft-lb)**

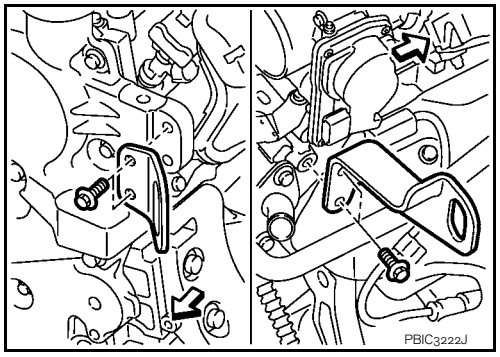

2. Remove starter motor. Refer to STR-25, "MR20DE MODELS : Exploded View".
3. Lift with a hoist and separate the engine from the transaxle assembly. Refer to TM-68, "Exploded View" (RS6F94R M/T) or TM-123, "Exploded View" (RS6F52A M/T).

INSTALLATION

Note the following, and install in the reverse order of removal.

CAUTION:
- **Never allow engine oil to get on engine mounting insulator. Be careful not to damage engine mounting insulator.**
- **Make sure that each mounting insulator is seated properly, and tighten mounting nuts and bolts.**

Engine Mounting Insulator (RH)

cardiagn.com

1. Temporarily tighten the bolt “4” shown in the figure.
2. Tighten bolts to the specified torque according to the numerical order shown in the figure.

⇦ : Vehicle front

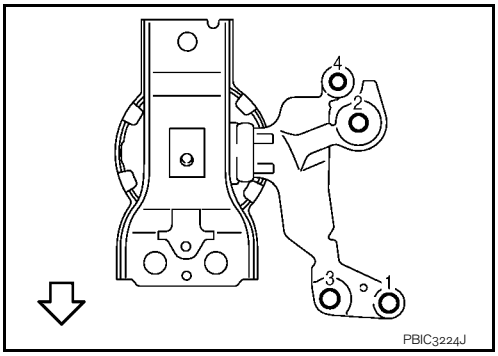

M/T : Inspection

INFOID:0000000000893961

INSPECTION AFTER INSTALLATION

Inspection for Leaks

- Before starting engine, check oil/fluid levels including engine coolant and engine oil. If less than required quantity, fill to the specified level. Refer to MA-21, "Fluids and Lubricants".
- Use procedure below to check for fuel leakage.
  - Turn ignition switch “ON” (with engine stopped). With fuel pressure applied to fuel piping, check for fuel leakage at connection points.
  - Start engine. With engine speed increased, check again for fuel leakage at connection points.
- Run engine to check for unusual noise and vibration.
- Warm up engine thoroughly to make sure there is no leakage of fuel, exhaust gases, or any oil/fluids including engine oil and engine coolant.
- Bleed air from lines and hoses of applicable lines, such as in cooling system.
- After cooling down engine, again check oil/fluid levels including engine oil and engine coolant. Refill to the specified level, if necessary.

Summary of the inspection items:

Item	Before starting engine	Engine running	After engine stopped
Engine coolant	Level	Leakage	Level
Engine oil	Level	Leakage	Level
Other oils and fluid*	Level	Leakage	Level
Fuel	Leakage	Leakage	Leakage
Exhaust gases	—	Leakage	—

* Transmission/transaxle/CVT fluid, power steering fluid, brake fluid, etc.

CVT

CVT : Exploded View

INFOID:0000000000893962

cardiagn.com

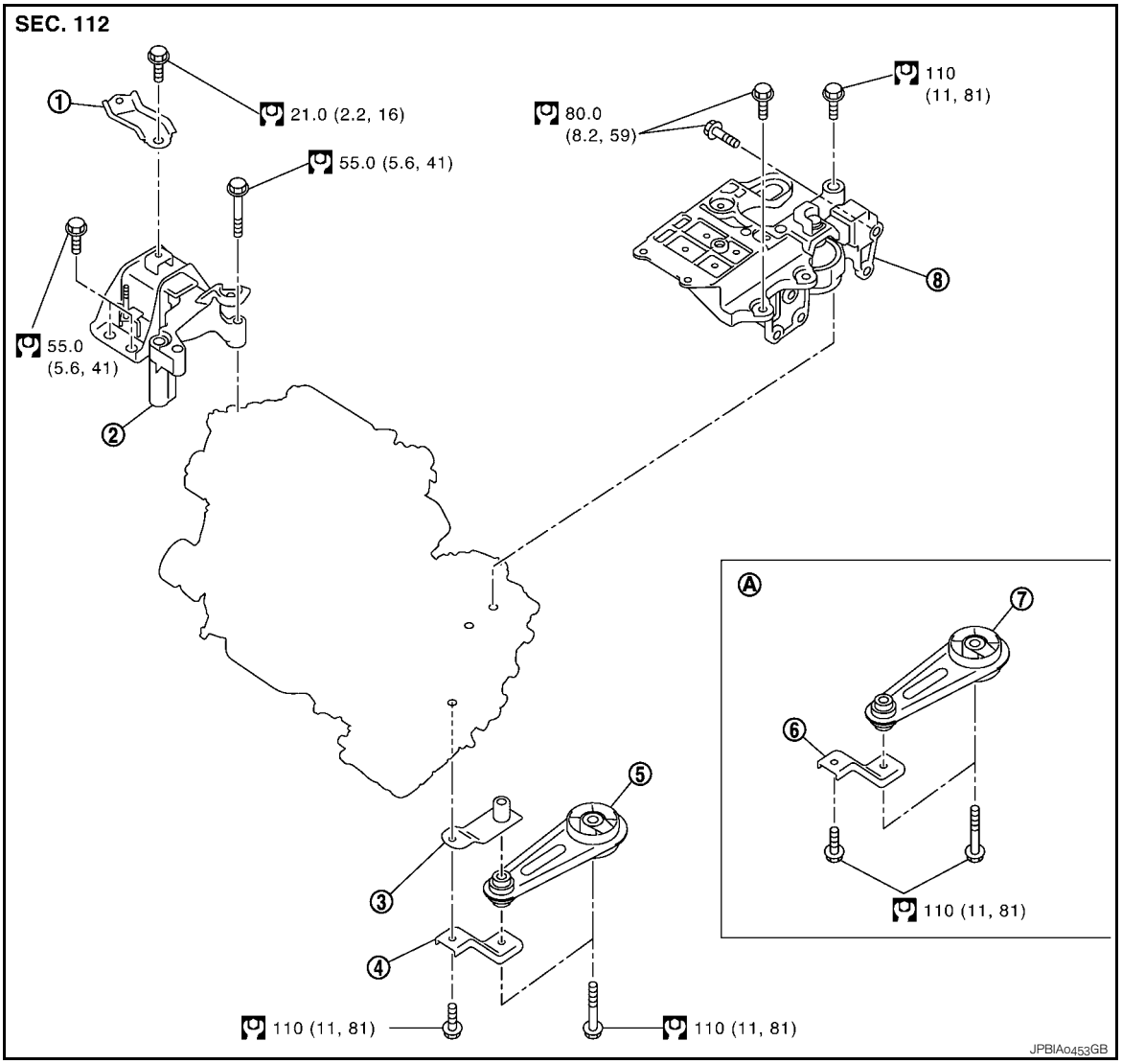

1. Engine mounting stay
2. Engine mounting insulator (RH)
3. Rear engine mounting bracket
4. Rear engine mounting bracket
5. Rear torque rod
6. Rear engine mounting bracket
7. Rear torque rod
8. Engine mounting insulator (LH)

A. 4WD models

Refer to GI-4, "Components" for symbols in the figure.

CVT : Removal and Installation

INFOID:0000000000893963

WARNING:
- **Situate the vehicle on a flat and solid surface.**
- **Place chocks at front and back of rear wheels.**
- **Attach proper slingers and bolts described in PARTS CATALOG if engine slingers are not equipped.**

CAUTION:
- **Always be careful to work safely, avoid forceful or uninstructed operations.**
- **Never start working until exhaust system and coolant are cool enough.**
- **If items or work required are not covered by the engine section, refer to the applicable sections.**
- **Always use the support point specified for lifting.**
- **Use either 2-pole lift type or separate type lift as best you can. If board-on type is used for unavoidable reasons, support at the rear axle jacking point with a transmission jack or similar tool before starting work, in preparation for the backward shift of center of gravity.**
- **For supporting points for lifting and jacking point at rear axle, refer to GI-33, "Garage Jack and Safety Stand and 2-Pole Lift".**

cardiagn.com

REMOVAL

Outline

Remove the engine and the transaxle assembly from the vehicle downward. Separate the engine and the transaxle.

Preparation

1. Release fuel pressure. Refer to EC-978, "Inspection".
2. Drain engine coolant from radiator. Refer to CO-30, "Draining".
   CAUTION:
   - **Perform this step when the engine is cold.**
   - **Never spill engine coolant on drive belt.**
3. Remove the following parts.
   - Engine undercover
   - Engine cover: Refer to EM-146, "Exploded View".
   - Front fender protector (RH and LH): Refer to EXT-21, "Exploded View".
   - Front road wheels and tires: Refer to WT-4, "Road Wheel".
   - Battery and battery tray: Refer to PG-118, "Exploded View".
   - Air duct and air cleaner case assembly: Refer to EM-144, "Exploded View".
   - Radiator hose (upper and lower), CVT fluid cooler hose and cooling fan assembly: Refer to CO-34, "Exploded View".
   - Exhaust front tube: Refer to EX-10, "Exploded View".

Engine Room LH

1. Disconnect all connections of engine harness around the engine mounting insulator (LH), and then temporarily secure the engine harness into the engine side.
   CAUTION:
   Protect connectors using a resin bag against foreign materials during the operation.
2. Disconnect fuel feed hose at engine side. Refer to EM-155, "Exploded View".
3. Disconnect heater hoses, and install plugs them to prevent engine coolant from draining. Refer to CO-44, "Exploded View".
4. Disconnect control cable from transaxle. Refer to TM-330, "Exploded View".
5. Remove ground cable at transaxle side.

Engine Room RH

1. Disconnect vacuum hose from intake manifold. Refer to EM-146, "Exploded View".
2. Disconnect A/C piping from A/C compressor, and temporarily fasten it on vehicle with a rope (with A/C models). Refer to HA-39, "Exploded View".
3. Disconnect reservoir tank hoses. Refer to CO-34, "Exploded View".

Vehicle Underbody

1. Remove front wheel sensor (LH and RH) for ABS from steering knuckle. Refer to BRC-67, "FRONT WHEEL SENSOR : Exploded View".
2. Remove brake caliper assembly with piping connected from steering knuckle. Temporarily secure it on the vehicle side with a rope to avoid load on it. Refer to BR-37, "BRAKE CALIPER ASSEMBLY : Exploded View".
3. Disconnect steering outer sockets from steering knuckle. Refer to ST-13, "Exploded View".
4. Remove rear torque rod.
5. Remove drive shafts (LH and RH). Refer to FAX-22, "MR20DE MODELS : Exploded View" (2WD models) or FAX-55, "Exploded View" (4WD models).
6. Remove propeller shaft (4WD models). Refer to DLN-110, "Exploded View".
7. Remove stabilizer connecting rod. Refer to FSU-16, "Exploded View".
8. Disconnect steering lower joint at steering gear assembly side, and release steering lower shaft. Refer to ST-10, "Exploded View".
9. Remove front suspension member. Refer to FSU-16, "Exploded View".
10. Preparation for the separation work of transaxle is as follows:
    - Remove transaxle joint bolts which pierce at oil pan (upper) lower rear side. Refer to EM-152, "Exploded View".

cardiagn.com

Removal

1. Use a manual lift table caddy (commercial service tool) or equivalently rigid tool such as a transmission jack. Securely support bottom of the engine and the transaxle assembly.
   CAUTION:
   Put a piece of wood or an equivalent as the supporting surface, secure a completely stable condition.

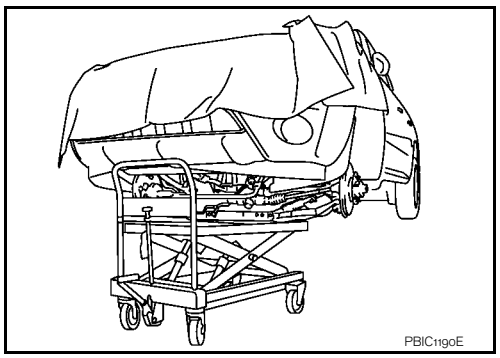

2. Remove four mounting bolts on engine mounting insulator (RH) (front cover side).
3. Remove two mounting bolts (A) on engine mounting insulator (LH) (transaxle side).

   ⇦ :Vehicle front

   CAUTION:
   Never remove the bolt (B) coupling insulator and bracket. (part not for disassembly)

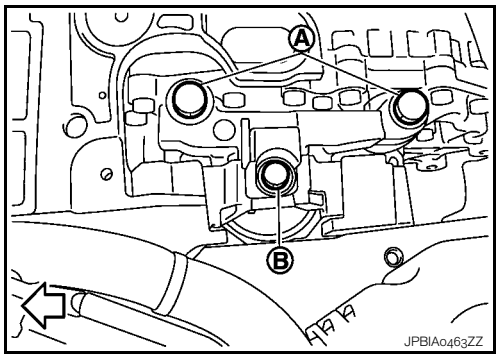

4. Carefully lower jack, or raise lift to remove the engine and the transaxle assembly. When performing work, observe the following caution.
   CAUTION:
   - **Make sure that no part interferes with the vehicle side.**
   - **Before and during this lifting, always check if any harnesses are left connected.**
   - **During the removal, always be careful to prevent the vehicle from falling off the lift due to changes in the center of gravity.**
   - **If necessary, support the vehicle by setting jack or suitable tool at the rear.**

Separation

1. Install engine slinger to front cover front left side and cylinder head rear right side.

   ⇦ : Engine front

   Slinger bolts
   Front cover side: **: 32.9 N·m (3.4 kg-m, 24 ft-lb)**
   Cylinder head side: **: 25.0 N·m (2.6 kg-m, 18 ft-lb)**

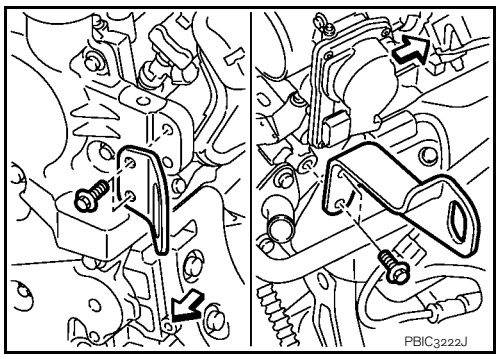

2. Remove starter motor. Refer to STR-25, "MR20DE MODELS : Exploded View".
3. Lift with a hoist and separate the engine from the transaxle assembly. Refer to TM-351, "2WD : Exploded View" (2WD models) or TM-354, "4WD : Exploded View" (4WD models).

INSTALLATION

Note the following, and install in the reverse order of removal.

CAUTION:
- **Never allow engine oil to get on engine mounting insulator. Be careful not to damage engine mounting insulator.**
- **Make sure that each mounting insulator is seated properly, and tighten mounting nuts and bolts.**

Engine mounting insulator (RH)

cardiagn.com

- Install engine mounting insulator (RH) to the engine side according to the following procedure.

1. Temporarily tighten mounting bolts the engine mounting insulator (RH) and the engine.

   ⇦ :Vehicle front

2. Tighten mounting bolts in the numerical order shown in the figure.

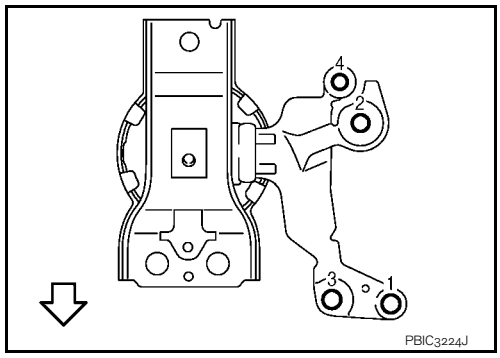

Engine mounting insulator (LH)

- Install engine mounting insulator (LH) to the transaxle side according to the following procedure.

1. Temporarily tighten the mounting bolt (A).

   ⇦ :Vehicle front

2. Tighten mounting bolt (B) to the specified torque.
3. Tighten mounting bolt (A) to the specified torque.

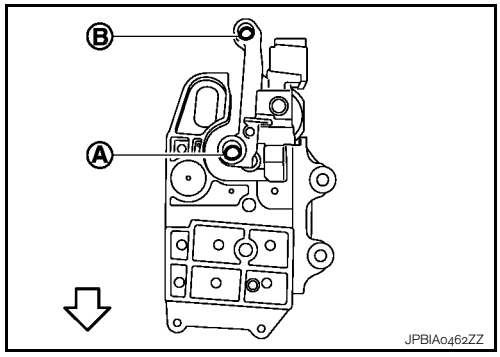

CVT : Inspection

INFOID:0000000000893964

INSPECTION AFTER INSTALLATION

Inspection for Leaks

- Before starting engine, check oil/fluid levels including engine coolant and engine oil. If less than required quantity, fill to the specified level. Refer to MA-21, "Fluids and Lubricants".
- Use procedure below to check for fuel leakage.
- Turn ignition switch “ON” (with engine stopped). With fuel pressure applied to fuel piping, check for fuel leakage at connection points.
- Start engine. With engine speed increased, check again for fuel leakage at connection points.
- Run engine to check for unusual noise and vibration.
- Warm up engine thoroughly to make sure there is no leakage of fuel, exhaust gases, or any oil/fluids including engine oil and engine coolant.
- Bleed air from lines and hoses of applicable lines, such as in cooling system.
- After cooling down engine, again check oil/fluid levels including engine oil and engine coolant. Refill to the specified level, if necessary.

Summary of the inspection items:

Item	Before starting engine	Engine running	After engine stopped
Engine coolant	Level	Leakage	Level
Engine oil	Level	Leakage	Level
Other oils and fluid*	Level	Leakage	Level
Fuel	Leakage	Leakage	Leakage
Exhaust gases	—	Leakage	—

* Transmission/transaxle/CVT fluid, power steering fluid, brake fluid, etc.

cardiagn.com

DISASSEMBLY AND ASSEMBLY

ENGINE STAND SETTING

Setting

INFOID:0000000000893965

NOTE:
Explained here is how to disassemble with engine stand supporting transaxle surface. When using different type of engine stand, note with difference in steps and etc.

1. Remove the engine and the transaxle assembly from the vehicle, and separate the transaxle from the engine. Refer to EM-194, "M/T : Exploded View" (M/T models) or EM-198, "CVT : Exploded View" (CVT models).
2. Install engine to engine stand with the following procedure:

a. Remove flywheel (M/T models) or drive plate (1) (CVT models).
   - Secure flywheel or drive plate with a stopper plate [SST: KV11105210] (A), and remove mounting bolts.

   CAUTION:
   - **Never disassemble them.**
   - **Never place them with signal plate facing down.**
   - **When handling signal plate, take care not to damage or scratch them.**
   - **Handle signal plate in a manner that prevents them from becoming magnetized.**

   NOTE:
   This figure shows CVT models as an example.

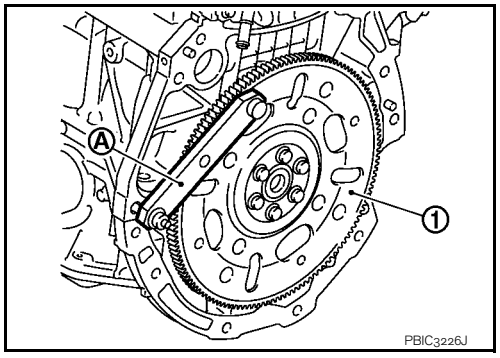

b. Lift the engine with a hoist to install it onto widely use engine stand.

   CAUTION:
   - **Use the engine stand that has a load capacity [approximately 135 kg (298 lb) or more] large enough for supporting the engine weight.**
   - If the load capacity of stand is not adequate, remove the following parts beforehand to reduce the potential risk of overturning stand.
   - Intake manifold: Refer to EM-146, "Exploded View".
   - Exhaust manifold: Refer to EM-149, "Exploded View".
   - Rocker cover: Refer to EM-160, "Exploded View".

   NOTE:
   The figure shows an example of widely used engine stand (A) that can support mating surface of transaxle with flywheel (M/T models) or drive plate (CVT models) removed.

   CAUTION:
   Before removing the hanging chains, make sure the engine stand is stable and there is no risk of overturning.

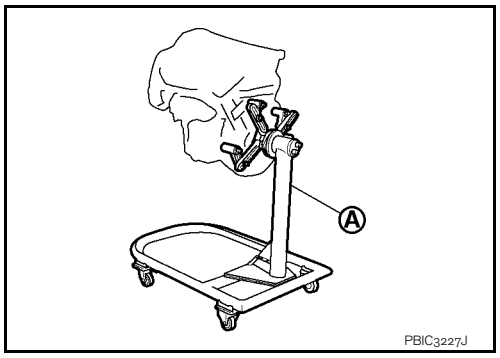

3. Drain engine oil. Refer to LU-15, "Draining".

   CAUTION:
   Be sure to clean drain plug and install with new washer.

cardiagn.com

4. Drain engine coolant by removing water drain plug (1) from inside of the engine.

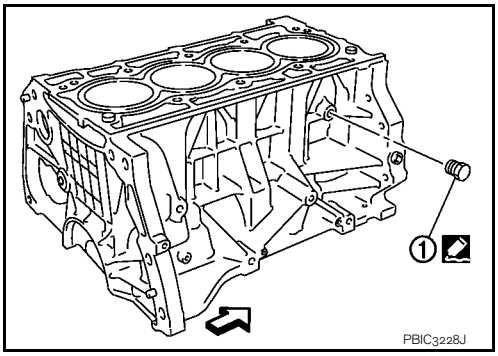

⇦ : Engine front

Tightening torque : Refer to EM-210, "Exploded View"

Use Genuine Liquid Gasket or equivalent.

cardiagn.com

ENGINE UNIT

Disassembly

INFOID:0000000000893996

1. Remove intake manifold. Refer to EM-146, "Exploded View".
2. Remove exhaust manifold. Refer to EM-149, "Exploded View".
3. Remove oil pan (lower). Refer to EM-152, "Exploded View".
4. Remove oil cooler. Refer to LU-18, "Exploded View".
5. Remove ignition coil, spark plug and rocker cover. Refer to EM-160, "Exploded View".
6. Remove fuel injector and fuel tube. Refer to EM-155, "Exploded View".
7. Remove timing chain. Refer to EM-162, "Exploded View".
8. Remove camshaft. Refer to EM-173, "Exploded View".
9. Remove water inlet. Refer to CO-41, "Exploded View".
10. Remove water outlet. Refer to CO-44, "Exploded View".
11. Remove cylinder head. Refer to EM-185, "Exploded View".

Assembly

INFOID:0000000000893997

Assembly is the reverse order of disassembly.

cardiagn.com

OIL PAN (UPPER)

Exploded View

INFOID:0000000000971166

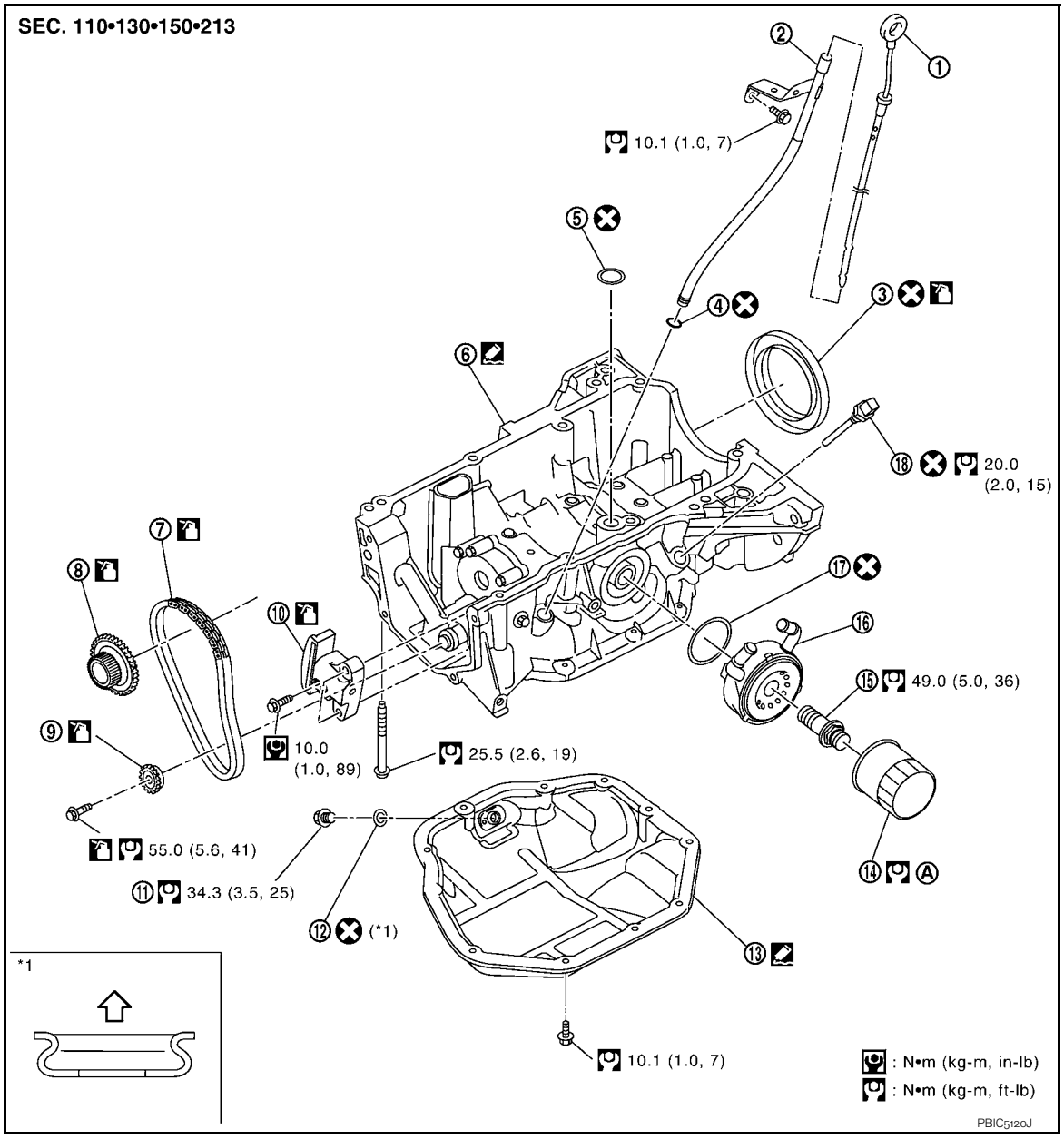

1.	Oil level gauge	2.	Oil level gauge guide	3.	Rear oil seal
4.	O-ring	5.	O-ring	6.	Oil pan (upper)
7.	Balancer unit timing chain	8.	Crankshaft sprocket	9.	Balancer unit sprocket
10.	Balancer unit timing chain tensioner	11.	Drain plug	12.	Drain plug washer
13.	Oil pan (lower)	14.	Oil filter	15.	Connector bolt
16.	Oil cooler	17.	O-ring	18.	Oil level sensor

A. Refer to LU-17

⇦ : Oil pan side

Refer to GI-4, "Components" for symbols in the figure.

Removal and Installation

INFOID:0000000000971165

cardiagn.com

REMOVAL

1. Remove oil pan (lower). Refer to EM-152, "Exploded View".
2. Remove oil cooler and oil filter. Refer to LU-18, "Exploded View".
   NOTE:
   For reference when installing, put a matching mark on oil cooler and oil pan (upper).
3. Remove front cover, timing chain, balancer unit timing chain and other related parts. Refer to EM-162, "Exploded View".
4. Remove oil level gauge and oil level gauge guide.
5. Remove oil level sensor, if necessary.
   CAUTION:
   Never drop or shock oil level sensor.
6. Remove oil pan (upper) with the following procedure:

a. Loosen bolts in reverse order as shown in the figure.

⇦ : Engine front

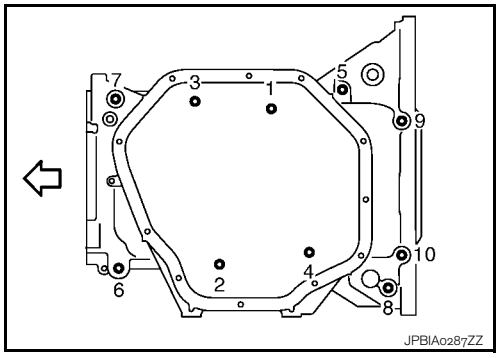

b. Insert a screwdriver shown by the arrow (⬅) in the figure and open up a crack between oil pan (upper) and cylinder block.

⇦ : Engine front

CAUTION:
A more adhesive liquid gasket is applied compared to previous types when shipped, so it should not be forced off the position not specified.

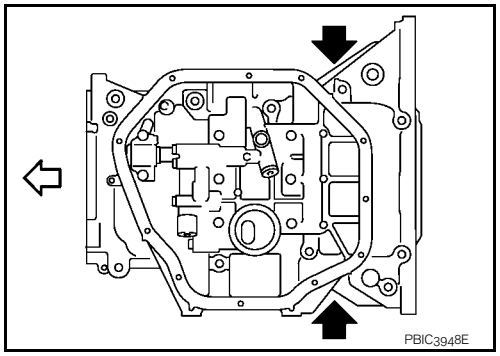

c. Insert seal cutter [SST: KV10111100] between oil pan (upper) and cylinder block, and slide it by tapping on the side of the tool with a hammer.
   CAUTION:
   Be careful not to damage the mating surface.

7. Remove O-ring between cylinder block and oil pan (upper).

INSTALLATION

1. Install oil pan (upper) with the following procedure:

a. Use a scraper (A) to remove old liquid gasket from mating surfaces.
   - Remove the old liquid gasket from mating surface of cylinder block.
   - Remove old liquid gasket from the bolt holes and threads.

   CAUTION:
   Never scratch or damage the mating surfaces when cleaning off old liquid gasket.

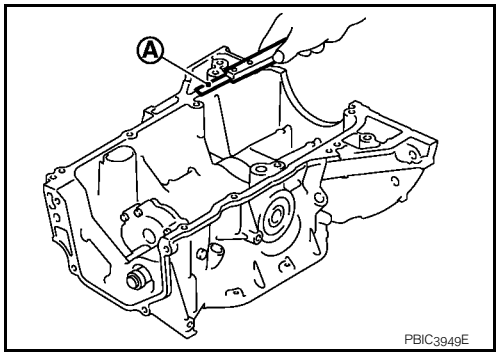

cardiagn.com

b. Apply a continuous bead of liquid gasket (C) with a tube presser (commercial service tool) as shown in the figure.

1 : Oil pan (upper)
A : 2 mm protruded to outside
B : 2 mm protruded to rear oil seal mounting side
⇦ : Engine front
⬅ : Engine outside

Use Genuine Liquid Gasket or equivalent.
CAUTION:
Apply liquid gasket to outside of bolt hole for the positions shown by ▲ marks.

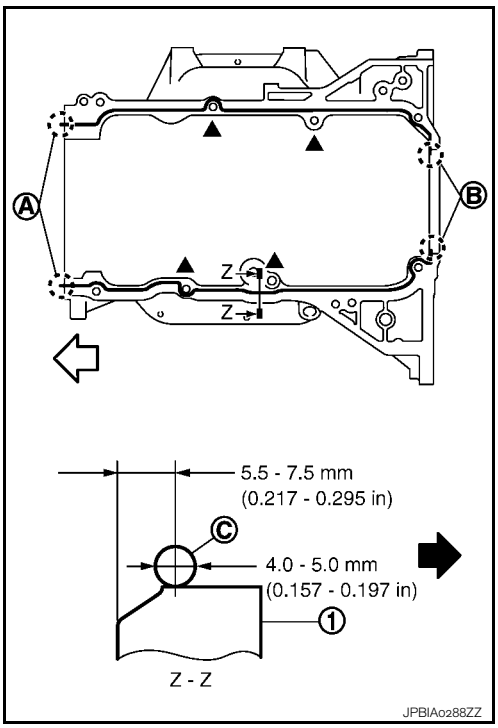

c. Install new O-ring at cylinder block side.
CAUTION:
Install avoiding misalignment of O-ring.

d. Tighten bolts in numerical order as shown in the figure.

⇦ : Engine front

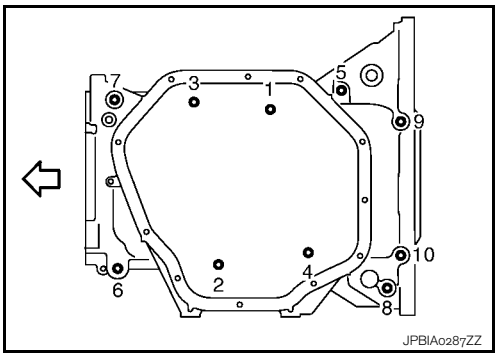

2. Install rear oil seal with the following procedure.
CAUTION:
- **The installation of rear oil seal should be completed within 5 minutes after installing oil pan (upper).**
- **Always replace rear oil seal with new one.**
- **Never touch oil seal lip.**

a. Wipe off liquid gasket protruding to the rear oil seal mounting part of oil pan (upper) and cylinder block using a scraper.

b. Apply engine oil to entire outside area of rear oil seal.

c. Press-fit the rear oil seal using a suitable drift with outer diameter 115 mm (4.53 in) and inner diameter 90 mm (3.54 in) (A).

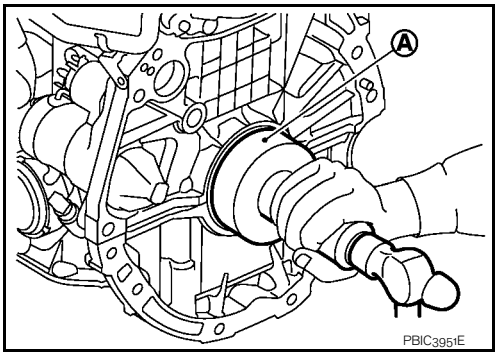

cardiagn.com

- Press-fit to the specified dimensions as shown in the figure.

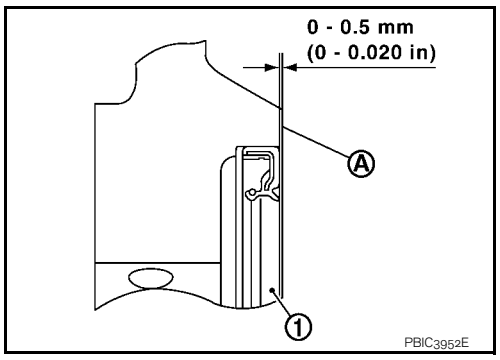

1 : Rear oil seal

A : Cylinder block rear end surface

CAUTION:
- **Never touch the grease applied to the oil seal lip.**
- **Be careful not to damage the rear oil seal mounting part of oil pan (upper) and cylinder block or the crankshaft.**
- **Press-fit straight, making sure that rear oil seal does not curl or tilt.**

NOTE:
The standard surface of the dimension is the rear end surface of cylinder block.

3. Install in the reverse order of removal, for the rest of parts.

Inspection

INFOID:0000000000971205

INSPECTION AFTER REMOVAL

Clean oil strainer portion (part of the oil pump) if any object attached.

cardiagn.com

CYLINDER BLOCK

Exploded View

INFOID:0000000000902309

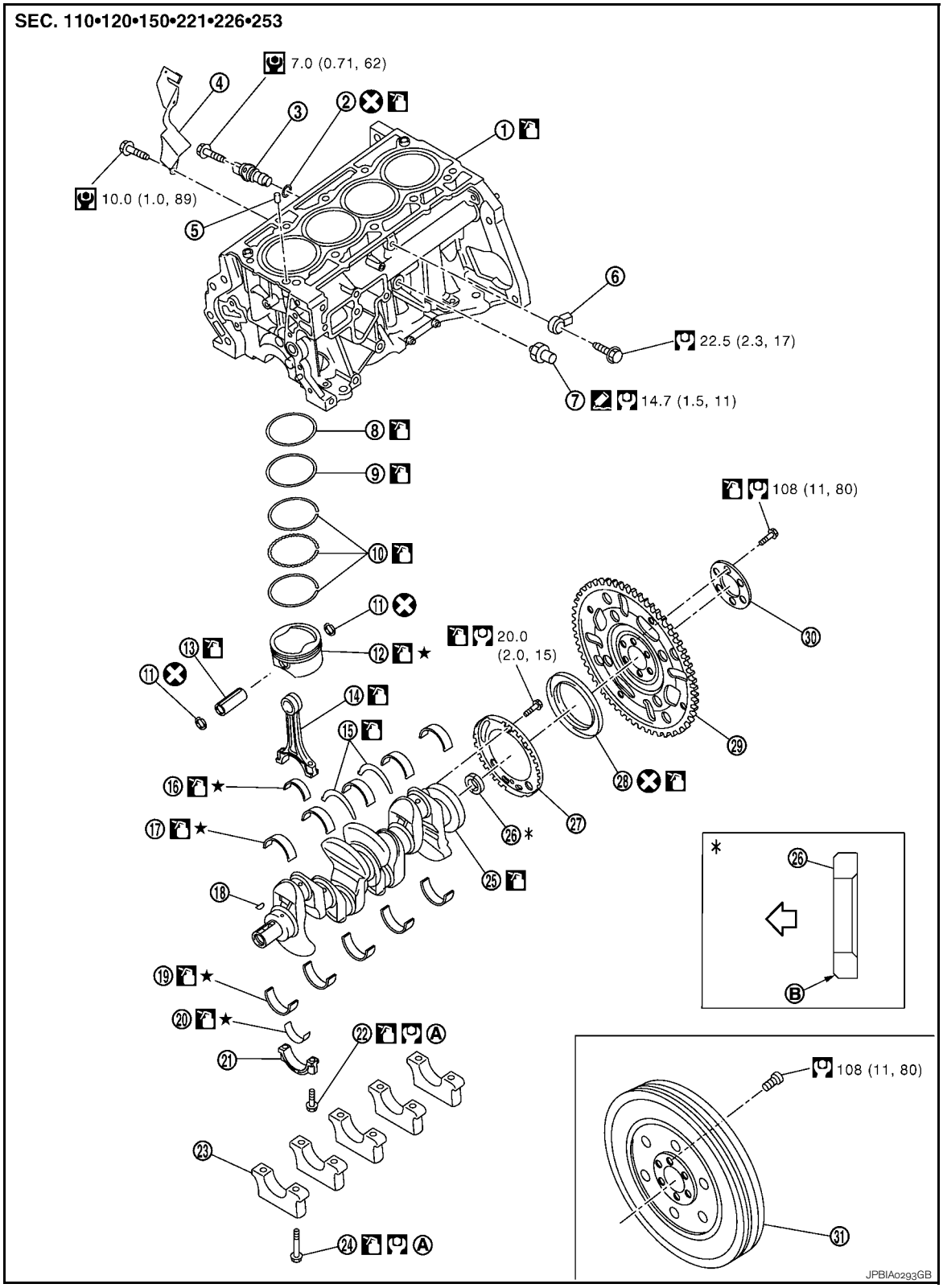

1. Cylinder block
2. O-ring
3. Crankshaft position sensor (POS)
4. Crankshaft position sensor (POS) cover
5. Oil filter (for intake valve timing control)
6. Knock sensor
7. Oil pressure switch
8. Top ring
9. Second ring

cardiagn.com

10. Oil ring	11. Snap ring	12. Piston
13. Piston pin	14. Connecting rod	15. Thrust bearing
16. Connecting rod bearing (upper)	17. Main bearing (upper)	18. Crankshaft key
19. Main bearing (lower)	20. Connecting rod bearing (lower)	21. Connecting rod cap
22. Connecting rod cap bolt	23. Main bearing cap	24. Main bearing cap bolt
25. Crankshaft	26. Pilot converter (CVT models)	27. Signal plate
28. Rear oil seal	29. Drive plate (CVT models)	30. Reinforcement plate (CVT models)
31. Flywheel (M/T models)		
A. Refer to EM-211	B. Chamfered	

⇦ : Crankshaft side

Refer to GI-4, "Components" for symbols shown in the figure.

Disassembly and Assembly

INFOID:0000000000893999

Disassembly

1. Remove oil pan (upper). Refer to EM-206, "Exploded View".
2. Remove thermostat housing. Refer to CO-41, "Exploded View".
3. Remove knock sensor.
   CAUTION:
   Handle it carefully and avoid impacts.
4. Remove crankshaft position sensor (POS) cover and crankshaft position sensor (POS).
   CAUTION:
   - **Handle it carefully and avoid impacts.**
   - **Never disassemble.**
   - **Never place sensor in a location where it is exposed to magnetism.**
5. Remove oil filter (for intake valve timing control).
6. Remove pilot converter (1) using pilot bushing puller [SST: ST16610001] (A) or suitable tool. (CVT models)
   NOTE:
   M/T models have no pilot converter.

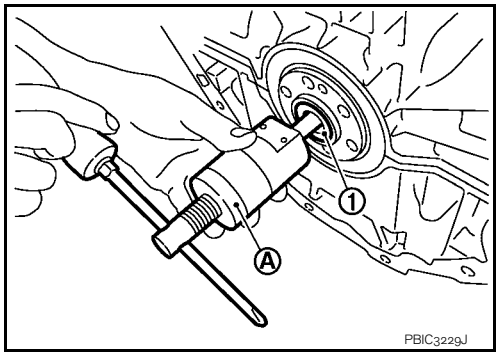

7. Remove piston and connecting rod assembly with the following procedure:
   - Before removing piston and connecting rod assembly, check the connecting rod side clearance. Refer to EM-219, "Inspection".

a. Position crankshaft pin corresponding to connecting rod to be removed onto the bottom dead center.

b. Remove connecting rod cap.

c. Using a hammer handle or similar tool, push piston and connecting rod assembly out to the cylinder head side.
   CAUTION:
   - **Be careful not to damage matching surface with connecting rod cap.**
   - **Be careful not to damage the cylinder wall and crankshaft pin, resulting from an interference of the connecting rod big end.**

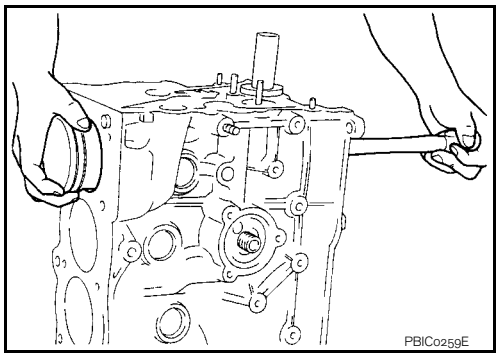

8. Remove connecting rod bearings.

cardiagn.com

CAUTION:
When removing them, note the installation position. Keep them in the correct.

9. Remove piston rings form piston.
   - Before removing piston rings, check the piston ring side clearance. Refer to EM-219, "Inspection".
   - Use a piston ring expander (commercial service tool) (A).

     CAUTION:
     - **When removing piston rings, be careful not to damage the piston.**
     - **Be careful not to damage piston rings by expanding them excessively.**

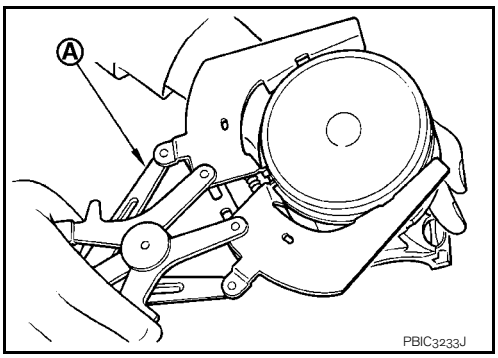

10. Remove piston from connecting rod with the following procedure:

a. Using snap ring pliers (A), remove snap rings.

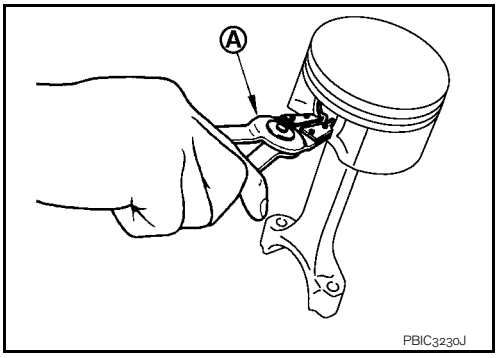

b. Heat piston to 60 to 70°C (140 to 158°F) with an industrial use drier (A) or equivalent.

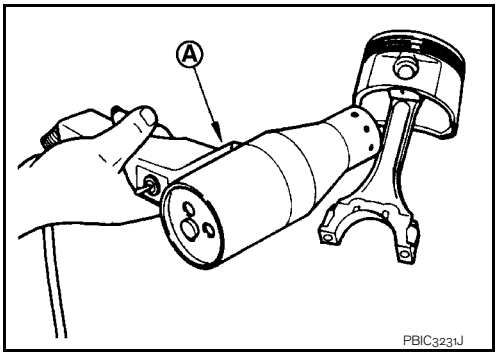

c. Push out piston pin with stick of outer diameter approximately 18 mm (0.71 in).

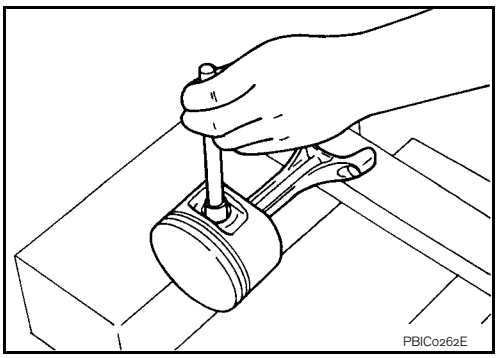

11. Remove main bearing cap mounting bolts.
    - Measure crankshaft end play before loosening main bearing cap mounting bolts. Refer to EM-219, "Inspection".

cardiagn.com

- Loosen and remove bolts in reverse order as shown in the figure.

  ⇦ : Engine front

- Use TORX socket (size E14).

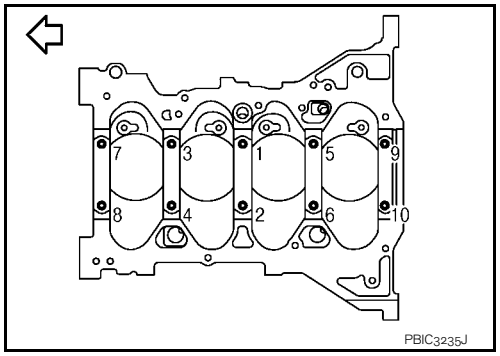

12. Remove main bearing caps.
    - Tap main bearing caps lightly with a plastic hammer for removal.
    CAUTION:
    Be careful not to damage the mounting surface.
13. Remove crankshaft.
    CAUTION:
    - **Be careful not to damage or deform signal plate (1) mounted on rear end of crankshaft (A).**
    - **When setting crankshaft on a flat floor surface, use a block of wood to avoid interference between signal plate and the floor surface.**
    - **Never remove signal plate unless it is necessary to do so.**

    NOTE:
    When removing or installing signal plate, use TORX socket (size T30).

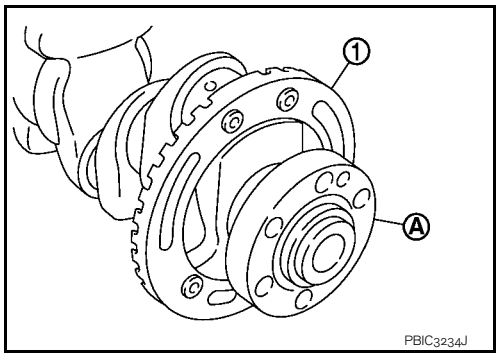

14. Pull rear oil seal out from rear end of crankshaft.
15. Remove main bearings and thrust bearings from cylinder block and main bearing caps.
    CAUTION:
    Identify installation positions, and store them without mixing them up.

Assembly

1. Fully air-blow engine coolant and engine oil passages in cylinder block, cylinder bore and crankcase to remove any foreign material.
   CAUTION:
   Use a goggles to protect your eye.
2. Install each plug to cylinder block as shown in the figure.

   2 : Washer

   ⇦ : Engine front

   - Apply liquid gasket to the thread of water drain plug (4).
     Use Genuine Liquid Gasket or equivalent.
   - Apply sealant to the thread of plug (1).
     Use Thread Locking Sealant or equivalent.
     NOTE:
     Do not apply liquid gasket or thread locking sealant to the plug (3).

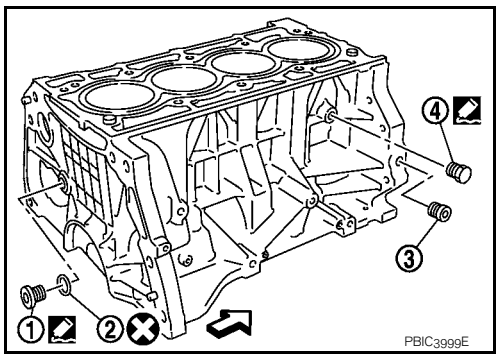

- Tighten each plug as specified below.

Part	Washer	Tightening torque
1	Yes	54.0 N·m (5.5 kg-m, 40 ft-lb)

cardiagn.com

Part	Washer	Tightening torque
3	No	19.6 N·m (2.0 kg-m, 14 ft-lb)
4	No	9.8 N·m (1.0 kg-m, 87 in-lb)

3. Install main bearings and thrust bearings with the following procedure:

a. Remove dust, dirt, and engine oil on the bearing mating surfaces of cylinder block and main bearing cap.

b. Install thrust bearings to the both sides of the No. 3 journal housing (B) on cylinder block.

⇦ : Engine front

- Install thrust bearings with the oil groove (A) facing crankshaft arm (outside).

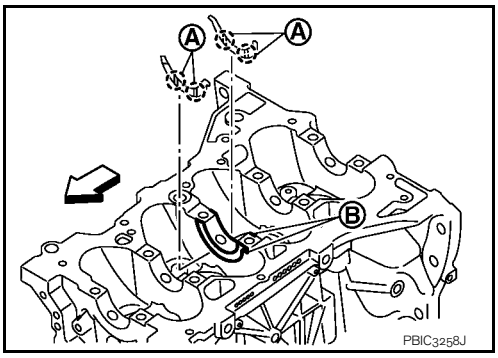

c. Install the main bearings paying attention to the direction.
- Before installing main bearings, apply new engine oil to the bearing surface (inside). Do not apply new engine oil to the back surface, but thoroughly clean it.
- When installing, align main bearing to the center position of cylinder block and main bearing cap.
- The difference (A) between main bearing upper (1) and main bearing lower (3) should be 0.85 mm (0.033 in) or less when installing.

2 : Cylinder block
4 : Main bearing cap

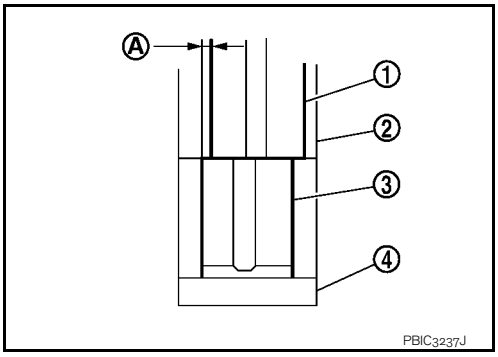

- Ensure the oil holes on cylinder block and oil holes (A) on the main bearings (1) are aligned.

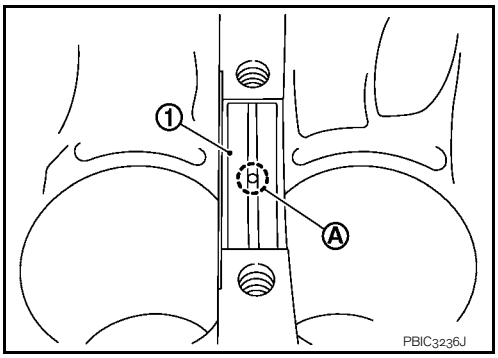

4. Install signal plate to crankshaft if removed.

a. Set the signal plate with the flange facing toward the counter weight side (engine front side) to the crankshaft rear surface.

b. Apply new engine oil to threads and seat surfaces of mounting bolts.

cardiagn.com

c. Position crankshaft (2) and signal plate (1) using a dowel pin (service part), and tighten mounting bolts in numerical order as shown in the figure using TORX socket.

A : Dowel pin hole

NOTE:
Dowel pin of crankshaft and signal plate is provided as a set for each.

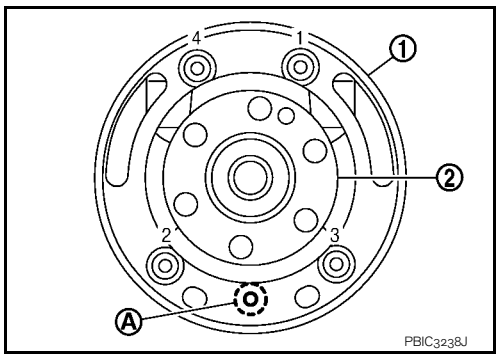

d. Tighten mounting bolts in numerical order as shown in the figure again.

e. Remove dowel pin. (service parts)
CAUTION:
Be sure to remove dowel pin.

5. Install crankshaft to cylinder block.
   - While turning crankshaft by hand, make sure that it turns smoothly.

6. Install main bearing caps with the following procedure:

a. Install main bearing caps referring to the journal No. stamp (A) and front mark (B) as shown in the figure.

⇦ : Engine front

NOTE:
Main bearing cap cannot be replaced as a single part, because it is machined together with cylinder block.

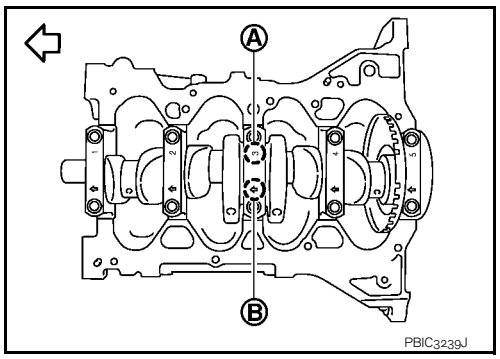

b. Tighten main bearing cap bolts in numerical order as shown in the figure with the following procedure:

⇦ : Engine front

i. Apply new engine oil to threads and seat surfaces of mounting bolts.

ii. Tighten main bearing cap bolts.

: 34.3 N·m (3.5 kg-m, 25 ft-lb)

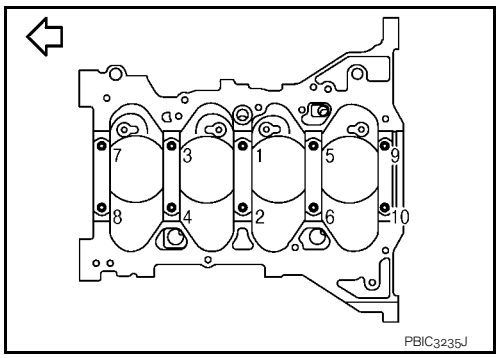

iii. Turn main bearing cap bolts 60 degrees clockwise (angle tightening) in order from No. 1 to 10 in the figure.
CAUTION:
Confirm the tightening angle by using an angle wrench [SST: KV10112100] (A) or protractor. Never judge by visual inspection without the tool.

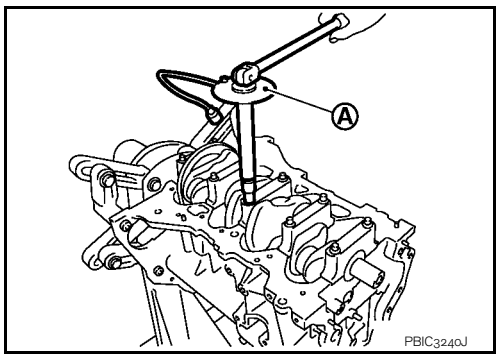

- After installing mounting bolts, make sure that crankshaft can be rotated smoothly by hand.
- Check crankshaft end play. Refer to EM-219, "Inspection".

7. Install piston to connecting rod with the following procedure:

a. Using snap ring pliers, install new snap ring to the groove of the piston rear side.
   - Insert it fully into groove to install.

b. Assemble piston to connecting rod.

cardiagn.com

- Using an industrial use drier or similar tool, heat the piston until the piston pin can be pushed in by hand without excess force [approximately 60 to 70°C (140 to 158°F)]. From the front to the rear, insert piston pin into piston and connecting rod.
- Assemble so that the front mark (A) on the piston head and the oil hole (B) and the cylinder number (D) on connecting rod are positioned as shown in the figure.

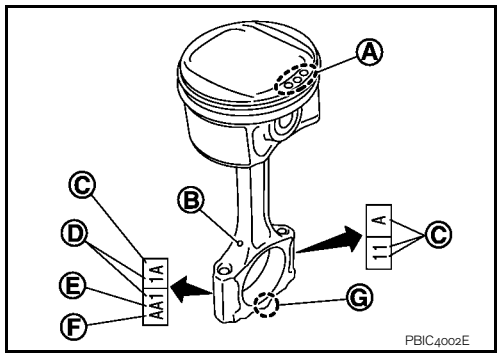

C : Management code
E : Big end diameter grade
F : Small end diameter grade
G : Front mark (connecting rod cap)

c. Install new snap ring to the groove of the piston front side.
- Insert it fully into groove to install.
- After installing, make sure that connecting rod moves smoothly.

8. Using a piston ring expander (commercial service tool), install piston rings.

CAUTION:
- **Be careful not to damage piston.**
- **Be careful not to damage piston rings by expanding them excessively.**
- Position each ring with the gap as shown in the figure referring to the piston front mark.

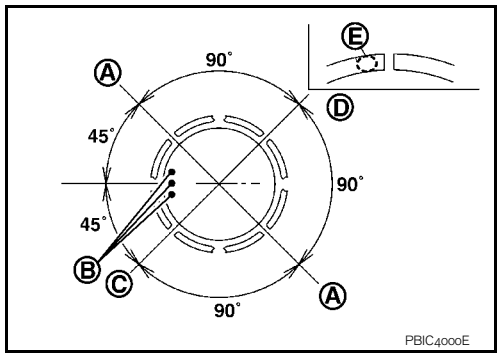

A : Oil ring upper or lower rail gap
B : Front mark
C : Second ring and oil ring spacer gap
D : Top ring gap
E : Stamped mark

CAUTION:
Never contact the rail end gap under the oil ring with the oil drain cast groove of piston.
- Install second ring with the stamped surface facing upward.

9. Install connecting rod bearing upper (2) and lower (3) to connecting rod (1) and connecting rod cap (4).

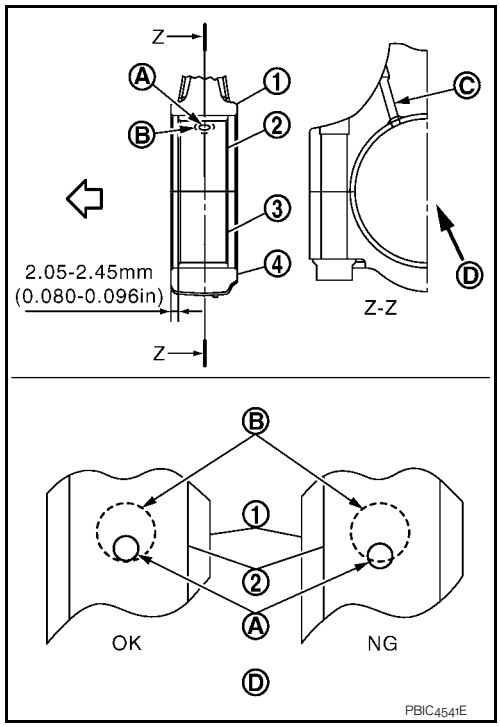

C : Oil hole (connecting rod)
D : Arrow view
⇦ : Engine front

- Install the connecting rod in the dimension shown in the figure.
- Make sure that connecting rod bearing oil hole (A) is completely in the inside of connecting rod oil hole chamfered area (B).
- When installing connecting rod bearings, apply new engine oil to the bearing surface (inside). Do not apply new engine oil to the back surface, but thoroughly clean it.

NOTE:
- There is no positioning tab.
- Install the connecting rod bearings in the center of connecting rod and connecting rod cap as shown in the figure. For service operation, the center position can be checked, visually.

10. Install piston and connecting rod assembly to crankshaft.

cardiagn.com

- Position crankshaft pin corresponding to connecting rod to be installed onto the bottom dead center.
- Apply new engine oil sufficiently to the cylinder bore, piston and crankshaft pin.
- Match the cylinder position with the cylinder number (D) on connecting rod to install.

B : Oil hole
C : Management code
E : Big end diameter grade
F : Small end diameter grade
G : Front mark (connecting rod cap)

- Install so that front mark (A) on the piston head faces the front of engine.

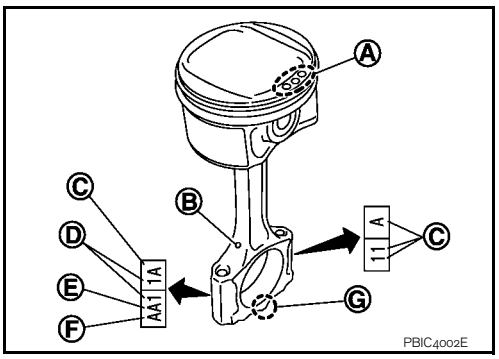

- Using a piston ring compressor [SST: EM03470000] (A) or suitable tool, install piston with the front mark on the piston head facing the front of the engine.
  CAUTION:
  Be careful not to damage the cylinder wall and crankshaft pin, resulting from an interference of the connecting rod big end.

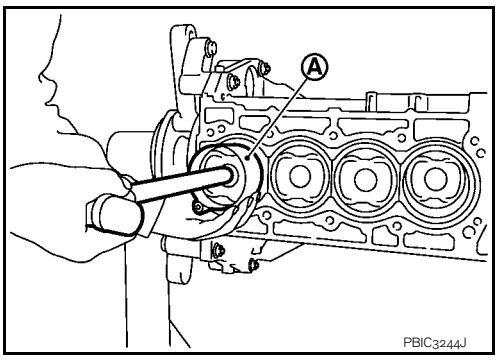

11. Install connecting rod cap.
    - Match the stamped cylinder number marks (D) on connecting rod with those on connecting rod cap to install.

A : Front mark (piston)
B : Oil hole
C : Management code
E : Big end diameter grade
F : Small end diameter grade
G : Front mark (connecting rod cap)

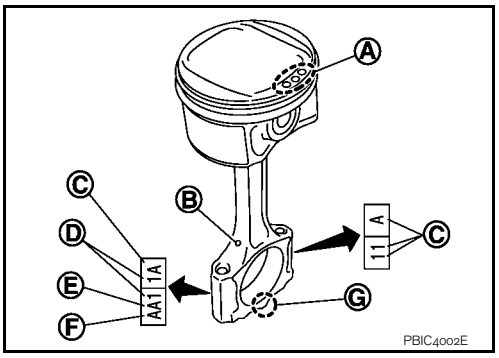

12. Tighten connecting rod bolt with the following procedure:
    CAUTION:
    - **Make sure that there is no gap in the thrust surface (A) of the joint between connecting rod (1) and connecting rod cap (2) and that these parts are in the correct position. And then, tighten the connecting rod cap bolts.**
    - **If the connecting rod bolts are reused, measure the outer diameter. Refer to EM-219, "Inspection".**

a. Apply new engine oil to the threads and seats of connecting rod cap bolts.
b. Tighten bolts.

: 27.4 N·m (2.8 kg-m, 20 ft-lb)

c. Completely loosen bolts.

: 0 N·m (0 kg-m, 0 ft-lb)

d. Tighten bolts.

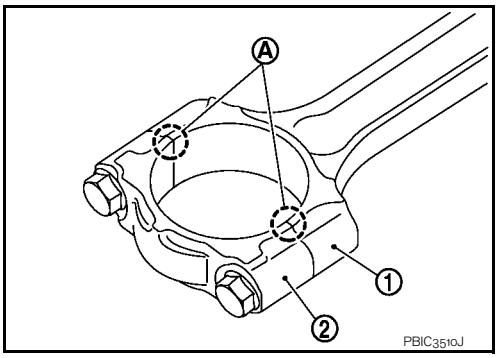

cardiagn.com

: 19.6 N·m (2.0 kg-m, 14 ft-lb)

e. Then turn all bolts 60 degrees clockwise (Angle tightening).
CAUTION:
Check and confirm the tightening angle by using an angle wrench [SST: KV10112100] (A) or protractor. Never judge by visual inspection without the tool.

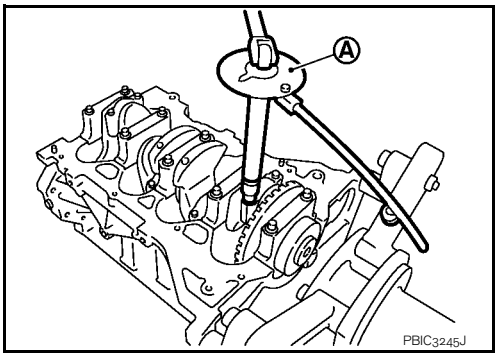

- After tightening connecting rod cap bolt, make sure that crankshaft rotates smoothly.
- Check the connecting rod side clearance. Refer to EM-219, "Inspection".

13. Install oil pan (upper). Refer to EM-206, "Exploded View".
NOTE:
Install the rear oil seal after installing the oil pan (upper).
14. Install rear oil seal. Refer to EM-206, "Exploded View".
15. Install drive plate (1) (CVT models) or flywheel (M/T models).

Drive plate
- Secure crankshaft with a stopper plate [SST: KV11105210] (A), and tighten mounting bolts crosswise over several times.

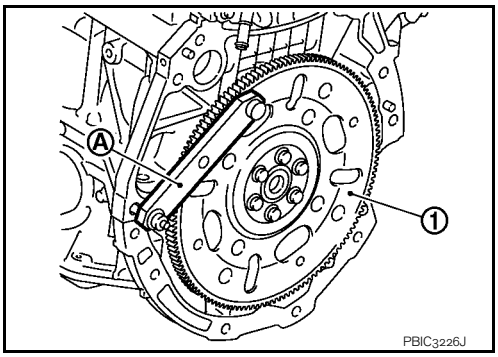

- Install drive plate (1), reinforcement plate (2) and pilot converter (3) as shown in figure.

A : Crankshaft rear end
B : Rounded
C : Chamfered

- Using a drift of 33 mm (1.30 in) in diameter, press-fit pilot converter into the end of crankshaft until it stops.

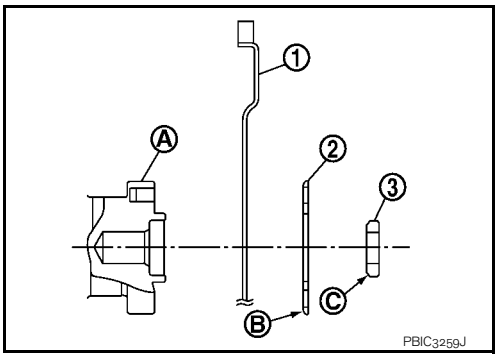

Flywheel
- Secure crankshaft with a stopper plate [SST: KV11105210], and tighten mounting bolts crosswise over several times.

NOTE:
M/T models have no pilot bushing and reinforcement plate.

16. Install knock sensor.

cardiagn.com

- Install knock sensor (1) with connector facing toward the rear of engine.

A : Cylinder block left side

⇦ : Engine front

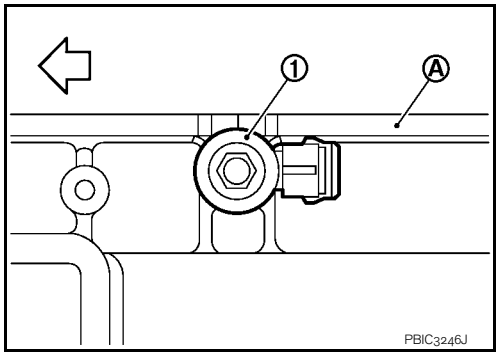

CAUTION:
- **Never tighten mounting bolts while holding the connector.**
- **If any impact by dropping is applied to knock sensor, replace it with a new one.**

NOTE:
- Make sure that there is no foreign material on the cylinder block mating surface and the back surface of knock sensor.
- Make sure that knock sensor does not interfere with other parts.

17. Install crankshaft position sensor (POS) and crankshaft position sensor (POS) cover.

CAUTION:
- **Handle it carefully and avoid impacts.**
- **Never disassemble.**
- **Never place sensor in a location where it is exposed to magnetism.**

18. Install oil filter (for intake valve timing control) (1) in the direction shown in the figure.
    - Make sure that the oil filter does not protrude from the upper surface of cylinder block (2) after installation.

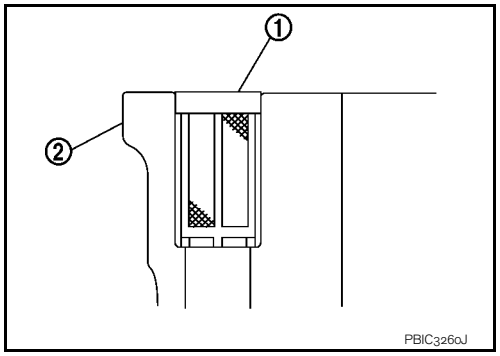

19. Assemble in the reverse order of disassembly.

Inspection

INFOID:0000000000893973

CRANKSHAFT END PLAY

- Measure the clearance between thrust bearings and crankshaft arm when crankshaft is moved fully forward or backward with a dial indicator (A).

Standard and Limit : **Refer to EM-241, "Cylinder Block".**

- If the measured value exceeds the limit, replace thrust bearings, and measure again. If it still exceeds the limit, replace crankshaft also.

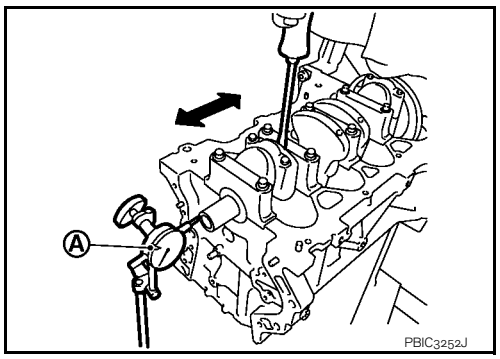

CONNECTING ROD SIDE CLEARANCE

cardiagn.com

- Measure the side clearance between connecting rod and crankshaft arm with a feeler gauge (A).

Standard and Limit : Refer to EM-241, "Cylinder Block".

- If the measured value exceeds the limit, replace connecting rod, and measure again. If it still exceeds the limit, replace crankshaft also.

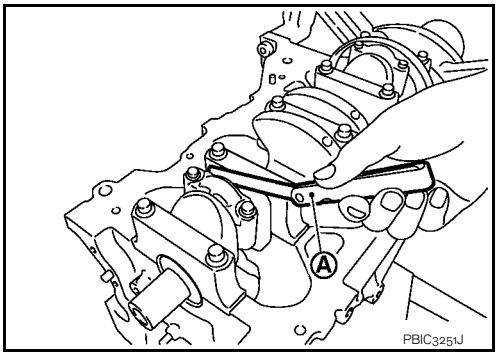

PISTON TO PISTON PIN OIL CLEARANCE

Piston Pin Hole Diameter

Measure the inner diameter of piston pin hole with an inside micrometer (A).

Standard : Refer to EM-241, "Cylinder Block".

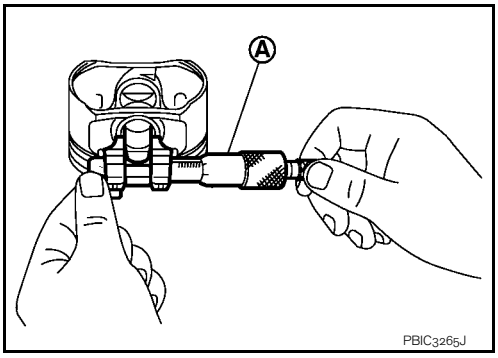

Piston Pin Outer Diameter

Measure the outer diameter of piston pin with a micrometer (A).

Standard : Refer to EM-241, "Cylinder Block".

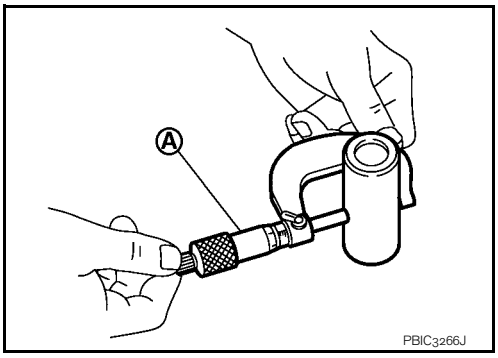

Piston to Piston Pin Oil Clearance

(Piston to piston pin oil clearance) = (Piston pin hole diameter) – (Piston pin outer diameter)

Standard : Refer to EM-241, "Cylinder Block".

- If oil clearance is out of the standard, replace piston and piston pin assembly.
- When replacing piston and piston pin assembly. Refer to EM-229, "Description".

NOTE:
- Piston is available together with piston pin as assembly.
- Piston pin (piston pin hole) grade is provided only for the parts installed at the plant. For service parts, no grades can be selected. (Only grade “0” is available.)

PISTON RING SIDE CLEARANCE

cardiagn.com

- Measure the side clearance of piston ring and piston ring groove with a feeler gauge (A).

Standard and Limit : Refer to EM-241, "Cylinder Block".

- If the measured value exceeds the limit, replace piston ring, and measure again. If it still exceeds the limit, replace piston also.

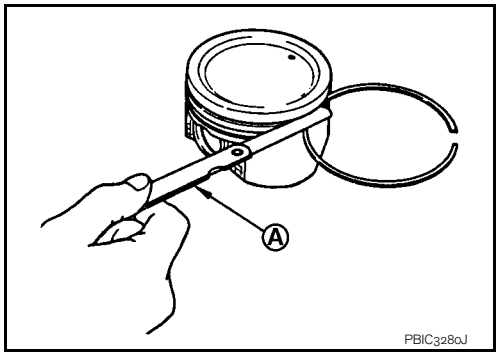

PISTON RING END GAP

- Make sure that cylinder bore inner diameter is within specification. Refer to “PISTON TO CYLINDER BORE CLEARANCE”.
- Lubricate with new engine oil to piston (1) and piston ring (2), and then insert (A) piston ring until middle of cylinder (B) with piston, and measure piston ring end gap with a feeler gauge (C).

Standard and Limit : Refer to EM-241, "Cylinder Block".

- If the measured value exceeds the limit, replace piston ring, and measure again. If it still exceeds the limit, re-bore cylinder and use oversized piston and piston rings.

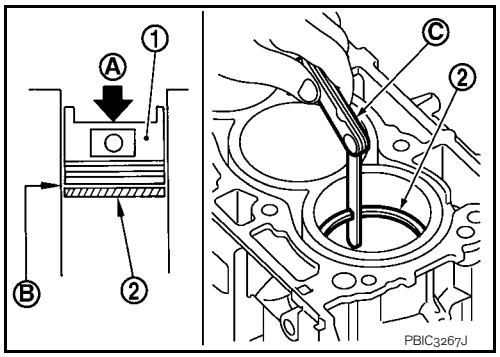

CONNECTING ROD BEND AND TORSION

- Check with a connecting rod aligner.

A : Bend
B : Torsion
C : Feeler gauge

Limit : Refer to EM-241, "Cylinder Block".

- If it exceeds the limit, replace connecting rod assembly.

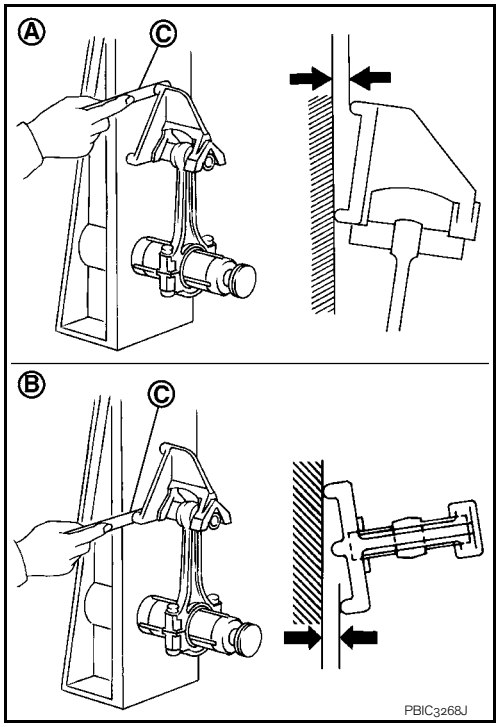

CONNECTING ROD BIG END DIAMETER

cardiagn.com

- Install connecting rod cap (1) without connecting rod bearing installed, and tightening connecting rod cap bolts to the specified torque. Refer to EM-211, "Disassembly and Assembly".

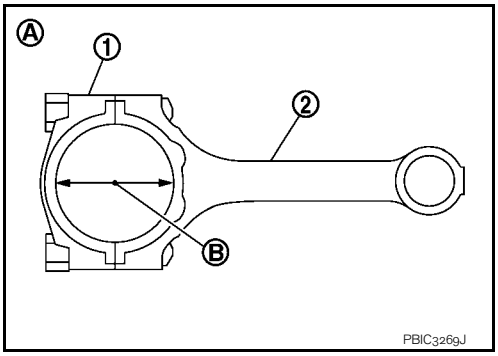

2	: Connecting rod
A	: Example
B	: Measuring direction of inner diameter

- Measure the inner diameter of connecting rod big end with an inside micrometer.

Standard : Refer to EM-241, "Cylinder Block".

- If out of the standard, replace connecting rod assembly.

CONNECTING ROD BUSHING OIL CLEARANCE

Connecting Rod Bushing Inner Diameter

Measure the inner diameter of connecting rod bushing with an inside micrometer (A).

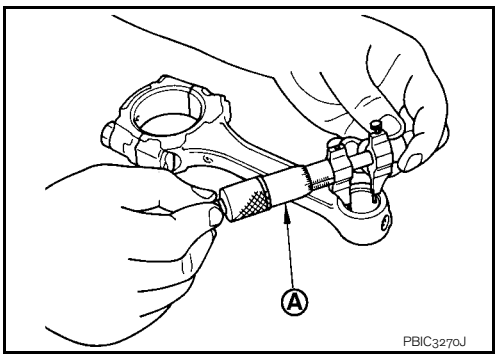

Standard : Refer to EM-241, "Cylinder Block".

Piston Pin Outer Diameter

Measure the outer diameter of piston pin with a micrometer (A).

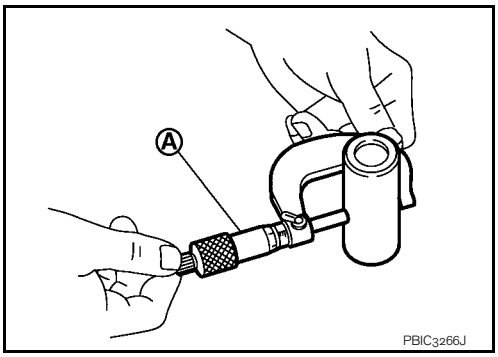

Standard : Refer to EM-241, "Cylinder Block".

Connecting Rod Bushing Oil Clearance

(Connecting rod bushing oil clearance) = (Connecting rod bushing inner diameter) – (Piston pin outer diameter)

Standard and Limit : Refer to EM-241, "Cylinder Block".

- If the measured value is out of the standard, replace connecting rod assembly and/or piston and piston pin assembly.
- If replacing piston and piston pin assembly. Refer to EM-229, "Piston".
- If replacing connecting rod assembly. Refer to EM-230, "Connecting Rod Bearing".

CYLINDER BLOCK TOP SURFACE DISTORTION

- Using a scraper, remove gasket on the cylinder block surface, and also remove engine oil, scale, carbon, or other contamination.

  CAUTION:

  Be careful not to allow gasket flakes to enter engine oil or engine coolant passages.

cardiagn.com

- Measure the distortion on the cylinder block upper face at some different points in six directions with a straight edge (A) and feeler gauge (B).

Limit : Refer to EM-241, "Cylinder Block".

- If it exceeds the limit, replace cylinder block.

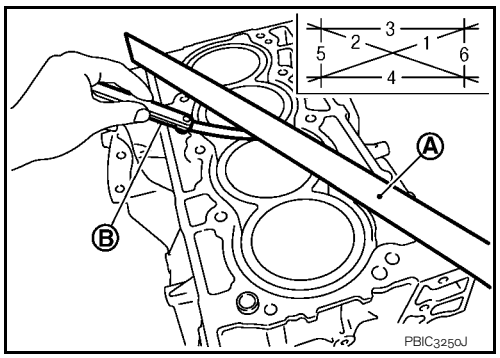

MAIN BEARING HOUSING INNER DIAMETER

- Install main bearing cap without main bearings installed, and tighten main bearing cap mounting bolts to the specified torque. Refer to EM-211, "Disassembly and Assembly".
- Measure the inner diameter of main bearing housing with a bore gauge.
- Measure the position shown in the figure [5 mm (0.20 in)] backward from main bearing housing front side in the 2 directions as shown in the figure. The smaller one is the measured value.

1 : Cylinder block
2 : Main bearing cap
⇦ : Engine front

Standard : Refer to EM-241, "Cylinder Block".

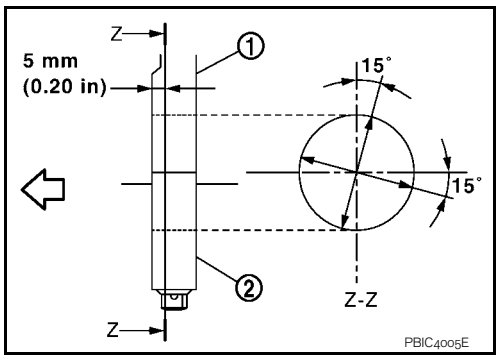

- If out of the standard, replace cylinder block and main bearing caps assembly.

NOTE:
Main bearing caps cannot be replaced as a single, because it is machined together with cylinder block.

PISTON TO CYLINDER BORE CLEARANCE

Cylinder Bore Inner Diameter

- Using a bore gauge (A), measure the cylinder bore for wear, out-of-round and taper at six different points on each cylinder. (“X” and “Y” directions at “A”, “B” and “C”) (“Y” is in longitudinal direction of engine)

NOTE:
When determining cylinder bore grade, measure the cylinder bore “X” direction at “B” position.

Standard:

Cylinder bore inner diameter

: Refer to EM-241, "Cylinder Block".

Limit:

Out-of-round (Difference between“X”and“ Y”)

Taper (Difference between“ A”and“ B”)

: Refer to EM-241, "Cylinder Block".

- If the measured value exceeds the limit, or if there are scratches and/or seizure on the cylinder inner wall, replace cylinder block.

NOTE:
Oversize piston is not provided.

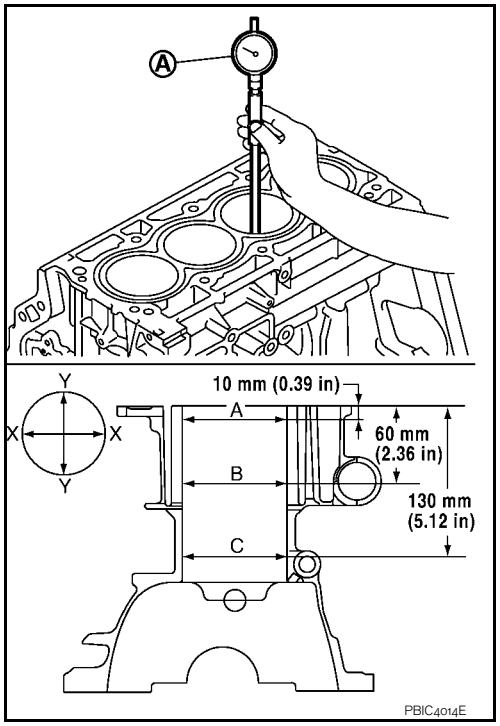

Piston Skirt Diameter

cardiagn.com

Measure the outer diameter of piston skirt with a micrometer (A).

Standard : Refer to EM-241, "Cylinder Block".

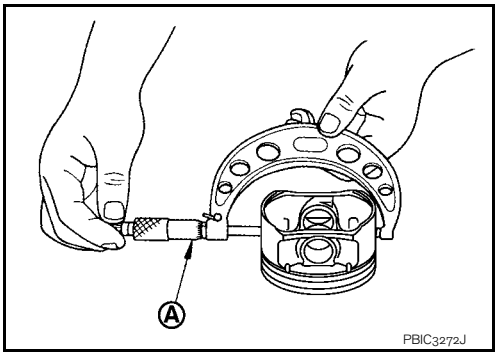

Piston to Cylinder Bore Clearance
Calculate by piston skirt diameter and cylinder bore inner diameter (direction “X”, position “B”).
(Clearance) = (Cylinder bore inner diameter) – (Piston skirt diameter)

Standard and Limit : Refer to EM-241, "Cylinder Block".

- If it exceeds the limit, replace piston and piston pin assembly and/or cylinder block. Refer to EM-229, "Piston".

CRANKSHAFT MAIN JOURNAL DIAMETER

- Measure the outer diameter of crankshaft main journals with a micrometer (A).

Standard : Refer to EM-241, "Cylinder Block".

- If out of the standard, measure the main bearing oil clearance. Then use undersize bearing. Refer to EM-245, "Main Bearing".

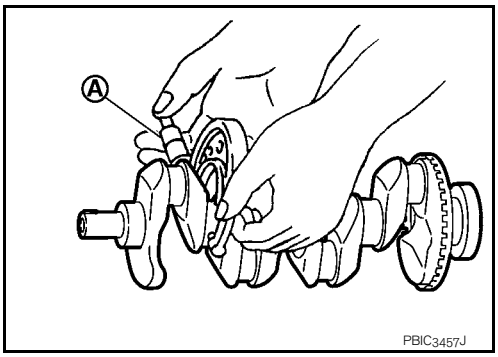

CRANKSHAFT PIN JOURNAL DIAMETER

- Measure the outer diameter of crankshaft pin journal with a micrometer.

Standard : Refer to EM-241, "Cylinder Block".

- If out of the standard, measure the connecting rod bearing oil clearance. Then use undersize bearing. Refer to EM-244, "Connecting Rod Bearing".

OUT-OF-ROUND AND TAPER OF CRANKSHAFT

- Measure the dimensions at four different points as shown in the figure on each main journal and pin journal with a micrometer.
- Out-of-round is indicated by the difference in dimensions between “X” and “Y” at “A” and “B”.
- Taper is indicated by the difference in dimension between “A” and “B” at “X” and “Y”.

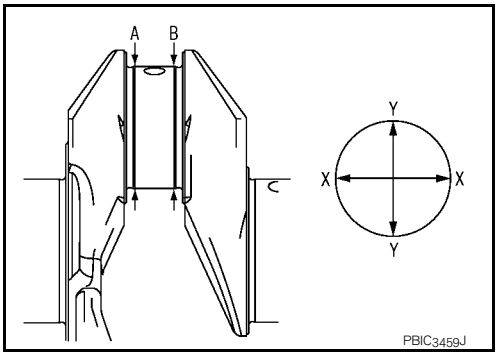

Limit:

Out-of-round (Difference between“X”and“Y”)

Taper (Difference between“A”and“B”)

: Refer to EM-241, "Cylinder Block".

- If the measured value exceeds the limit, correct or replace crankshaft.
- If corrected, measure the bearing oil clearance of the corrected main journal and/or pin journal. Then select main bearing and/or connecting rod bearing. Refer to EM-244, "Connecting Rod Bearing" and/or EM-245, "Main Bearing".

CRANKSHAFT RUNOUT

cardiagn.com

- Place a V-block on a precise flat table to support the journals on the both end of the crankshaft.
- Place a dial indicator (A) straight up on the No. 3 journal.
- While rotating crankshaft, read the movement of the pointer on the dial indicator. (Total indicator reading)

Standard and Limit : **Refer to EM-241, "Cylinder Block".**

- If it exceeds the limit, replace crankshaft.

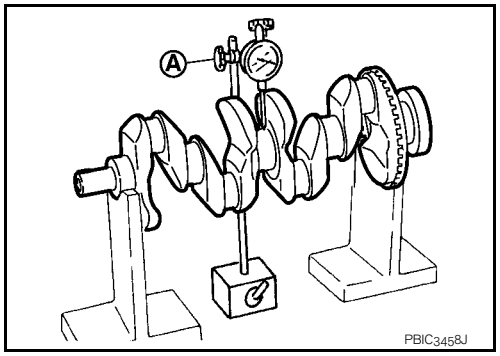

CONNECTING ROD BEARING OIL CLEARANCE

Method by Calculation

- Install connecting rod bearings (2) to connecting rod (3) and connecting rod bearing cap (1), and tighten connecting rod cap bolts to the specified torque. Refer to EM-211, "Disassembly and Assembly".

A : Example

B : Inner diameter measuring direction

- Measure the inner diameter of connecting rod bearing with an inside micrometer.
  (Bearing oil clearance) = (Connecting rod bearing inner diameter) – (Crankshaft pin journal diameter)

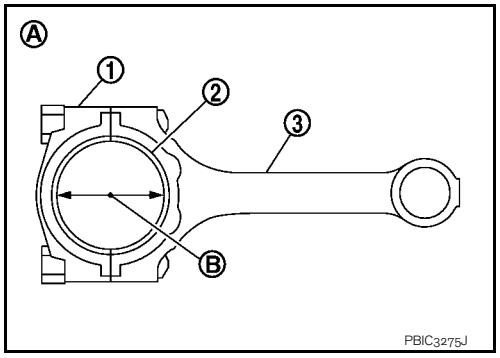

Standard and Limit : **Refer to EM-241, "Cylinder Block".**

- If clearance exceeds the limit, select proper connecting rod bearing according to connecting rod big end diameter and crankshaft pin journal diameter to obtain specified bearing oil clearance. Refer to EM-230, "Connecting Rod Bearing".

Method of Using Plastigage

- Remove engine oil and dust on crankshaft pin and the surfaces of each bearing completely.
- Cut a plastigage slightly shorter than the bearing width, and place it in crankshaft axial direction, avoiding oil holes.
- Install connecting rod bearings to connecting rod and cap, and tighten connecting rod cap bolts to the specified torque. Refer to EM-211, "Disassembly and Assembly".
  CAUTION:
  Never rotate crankshaft.
- Remove connecting rod cap and bearing, and using the scale (A) on the plastigage bag, measure the plastigage width.
  NOTE:
  The procedure when the measured value exceeds the limit is same as that described in the “Method by Calculation”.

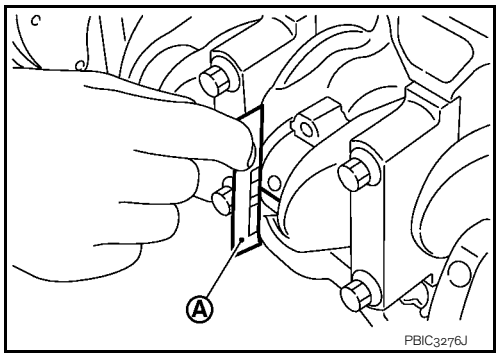

MAIN BEARING OIL CLEARANCE

Method by Calculation

cardiagn.com

- Install main bearings (3) to cylinder block (1) and main bearing cap (2), and tighten main bearing cap mounting bolts to the specified torque. Refer to EM-211, "Disassembly and Assembly".

A : Example
B : Inner diameter measuring direction

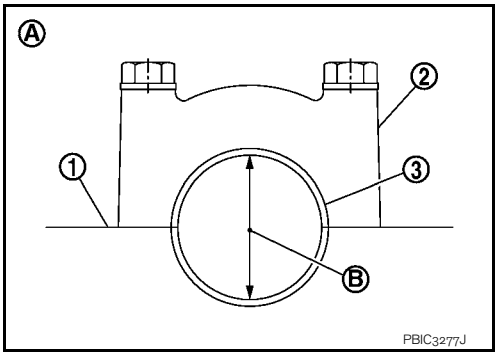

- Measure the inner diameter of main bearing with a bore gauge.

(Bearing oil clearance) = (Main bearing inner diameter) – (Crankshaft main journal diameter)

Standard and Limit : Refer to EM-241, "Cylinder Block".

- If clearance exceeds the limit, select proper main bearing according to main bearing inner diameter and crankshaft main journal diameter to obtain specified bearing oil clearance. Refer to EM-232, "Main Bearing".

Method of Using Plastigage

- Remove engine oil and dust on crankshaft main journal and the surfaces of each bearing completely.
- Cut a plastigage slightly shorter than the bearing width, and place it in crankshaft axial direction, avoiding oil holes.
- Install main bearings to cylinder block and main bearing cap, and tighten main bearing cap mounting bolts to the specified torque. Refer to EM-211, "Disassembly and Assembly".

CAUTION:
Never rotate crankshaft.

- Remove main bearing cap and bearings, and using the scale (A) on the plastigage bag, measure the plastigage width.

NOTE:
The procedure when the measured value exceeds the limit is same as that described in the “Method by Calculation”.

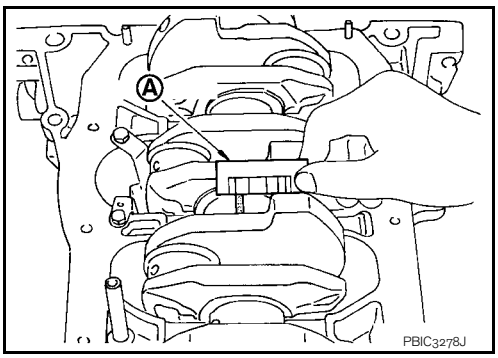

MAIN BEARING CRUSH HEIGHT

- When main bearing cap is removed after being tightened to the specified torque with main bearings (1) installed, the tip end of bearing must protrude (B). Refer to EM-211, "Disassembly and Assembly".

A : Example

Standard : There must be crush height.

- If the standard is not met, replace main bearings.

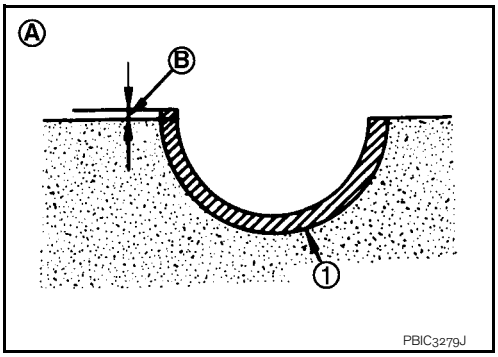

CONNECTING ROD BEARING CRUSH HEIGHT

- When connecting rod cap is removed after being tightened to the specified torque with connecting rod bearings (1) installed, the tip end of bearing must protrude (B). Refer to EM-211, "Disassembly and Assembly".

A : Example

Standard : There must be crush height.

- If the standard is not met, replace connecting rod bearings.

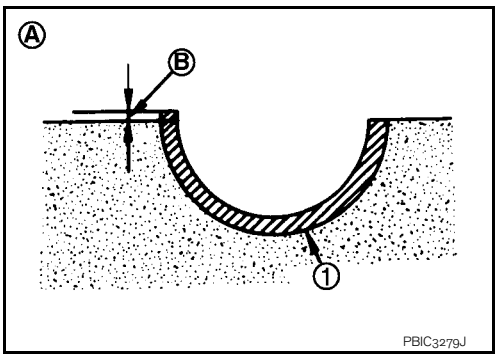

cardiagn.com

MAIN BEARING CAP BOLT OUTER DIAMETER

- Measure the outer diameters ("d_1", "d_2") at two positions as shown in the figure.

A : "d1" measuring position
B : "d2" measuring position

- If reduction appears in places other than "B" range, regard it as "d_2".

Limit ("d_1"–"d_2"): 0.15 mm (0.0059 in)

- If it exceeds the limit (a large difference in dimensions), replace main bearing cap mounting bolt with a new one.

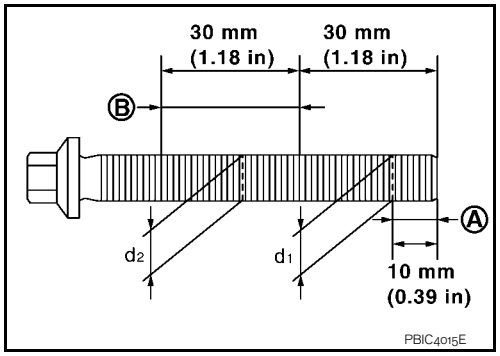

CONNECTING ROD CAP BOLT OUTER DIAMETER

- Measure the outer diameter "d" at position as shown in the figure.
- If reduction appears in a position other than "d", regard it as "d".

Limit: 7.75 mm (0.3051 in)

- When "d" exceeds the limit (when it becomes thinner), replace connecting rod cap bolt with a new one.

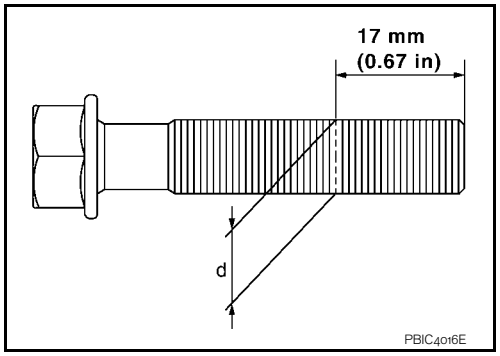

CLOGGED OR DAMAGED OIL FILTER (FOR INTAKE VALVE TIMING CONTROL)

- Make sure that there is no foreign material on the oil filter and check it for clogging.
- Clean it if necessary.
- Check the oil filter for damage.
- Replace it if necessary.

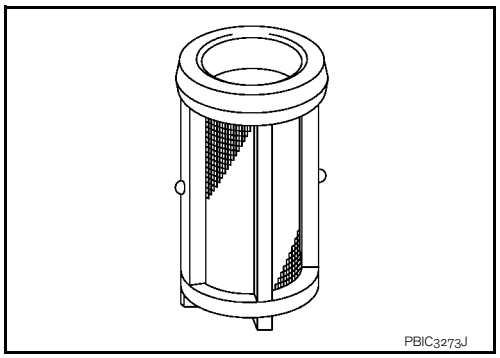

FLYWHEEL DEFLECTION (M/T MODELS)

- Measure the deflection of flywheel contact surface to torque with a dial indicator (A).
- Measure the deflection at 210 mm (8.27 in) diameter.

Limit : 0.45 mm (0.0177 in) or less.

- If measured value is out of the standard, replace flywheel.
- If a trace of burn or discoloration is found on the surface, repair it with sandpaper.

CAUTION:
When measuring, keep magnetic fields (such as dial indicator stand) away from signal plate of the rear end of crankshaft.

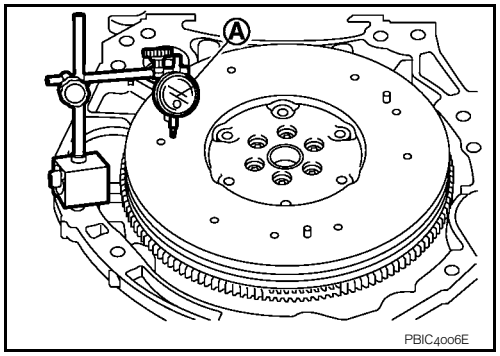

MOVEMENT AMOUNT OF FLYWHEEL (M/T MODELS)

CAUTION:
Never disassemble double mass flywheel.

Movement Amount of Thrust (Fore-and-Aft) Direction

- Measure the movement amount of thrust (fore-and-aft) direction when 100 N (10.2 kg, 22 lb) force is added at the portion of 125 mm (4.92 in) radius from the center of flywheel.

cardiagn.com

Standard : 1.8 mm (0.071 in) or less

- If measured value is out of the standard, replace flywheel.

Movement Amount in Radial (Rotation) Direction

Check the movement amount of radial (rotation) direction with the following procedure:

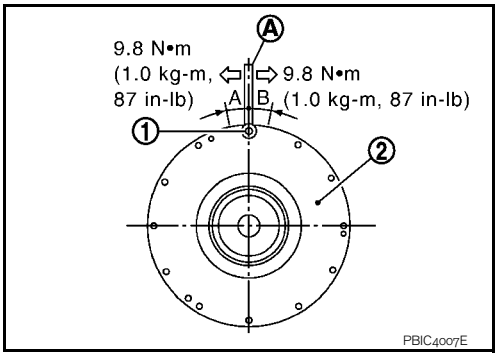

1. Install clutch cover mounting bolt (1) to clutch cover mounting hole, and place a torque wrench (A) on the extended line of the flywheel (2) center line.
   - Tighten bolt at a force of 9.8 N·m (1.0 kg-m, 87 in-lb) to keep it from loosening.
2. Put a mating mark on circumferences of the two flywheel masses without applying any load (Measurement standard points).
3. Apply a force of 9.8 N·m (1.0 kg-m, 87 in-lb) in each direction, and mark the movement amount on the mass on the transaxle side.
4. Measure the dimensions of movement amounts “A” and “B” on circumference of the flywheel on the transaxle side.

Limit : 33.2 mm (1.307 in) or less.

- If measured value is out of the standard, replace flywheel.

DRIVE PLATE DEFLECTION (CVT MODELS)

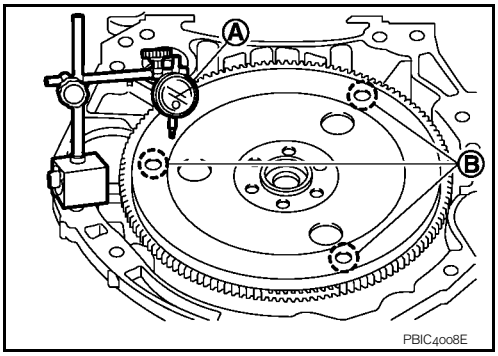

- Measure the deflection of drive plate contact surface to torque converter with a dial indicator (A).
- Measure the deflection at the area limited between 12.4 mm (0.488 in) dia and 20.0 mm (0.787 in) dia around hole (B).

Limit : 0.35 mm (0.0138 in) or less.

- If measured value is out of the standard, replace drive plate.

cardiagn.com

HOW TO SELECT PISTON AND BEARING

Description

INFOID:0000000000893974

Selection points	Selection parts	Selection items	Selection methods
Between cylinder block and crankshaft	Main bearing	Main bearing grade (bearing thickness)	Determined by match of cylinder block bearing housing grade (inner diameter of housing) and crankshaft journal grade (outer diameter of journal)
Between crankshaft and connecting rod	Connecting rod bearing	Connecting rod bearing grade (bearing thickness)	Combining service grades for connecting rod big end diameter and crankshaft pin outer diameter determine connecting rod bearing selection.
Between cylinder block and piston	Piston and piston pin assembly (piston is available together with piston pin as an assembly.)	Piston grade (piston outer diameter)	Piston grade = cylinder bore grade (inner diameter of bore)

- The identification grade stamped on each part is the grade for the dimension measured in new condition. This grade cannot apply to reused parts.
- For reused or repaired parts, measure the dimension accurately. Determine the grade by comparing the measurement with the values of each selection table.
- For details of the measurement method of each part, the reuse standards and the selection method of the selective fitting parts, refer to the text.

Piston

INFOID:0000000000893975

WHEN NEW CYLINDER BLOCK IS USED

- Check the cylinder bore grade on rear left side of cylinder block (L), and select piston of the same grade.

A : Correction stamp
B : Standard stamp
C : Cylinder No. 1 bore grade
D : Cylinder No. 2 bore grade
E : Cylinder No. 3 bore grade
F : Cylinder No. 4 bore grade
G : No. 1 main bearing housing grade
H : No. 2 main bearing housing grade
I : No. 3 main bearing housing grade
J : No. 4 main bearing housing grade
K : No. 5 main bearing housing grade
⇦ : Engine front

- If there is a correction stamp mark on the cylinder block, use it as a correct reference.

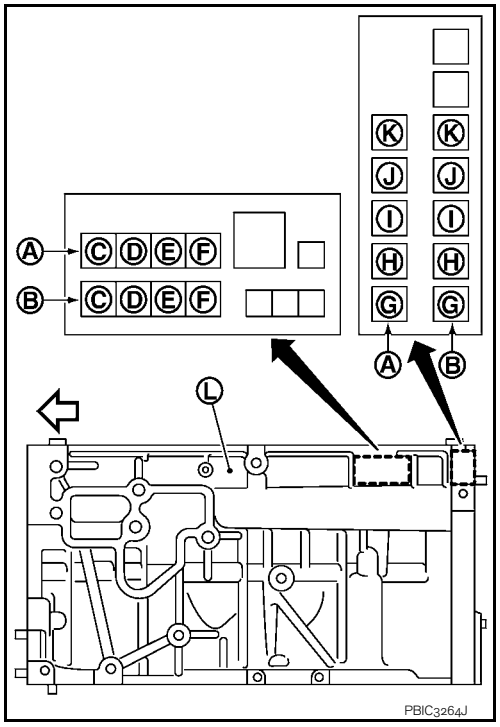

WHEN CYLINDER BLOCK IS REUSED

1. Measure the cylinder bore inner diameter. Refer to EM-241, "Cylinder Block".
2. Determine the bore grade by comparing the measurement with the values under the cylinder bore inner diameter of the “Piston Selection Table”.

cardiagn.com

3. Select piston of the same grade.

A : Identification code
B : Front mark
C : Sub grade number
D : Piston grade number

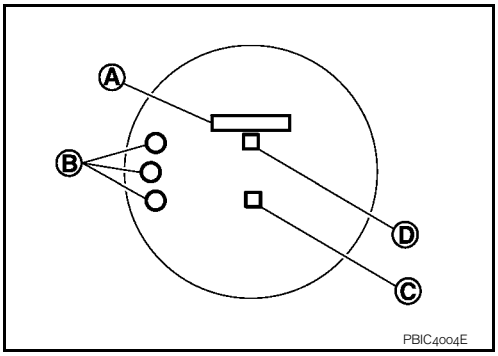

PISTON SELECTION TABLE

Unit: mm (in)

Grade number (Mark)	1	2 [or no mark (piston only)]
Cylinder bore Inner diameter	84.000 - 84.010 (3.3071 - 3.3075)	84.010 - 84.020 (3.3075 - 3.3079)
Piston skirt diameter	83.970 - 83.980 (3.3059 - 3.3063)	83.980 - 83.990 (3.3063 - 3.3067)

NOTE:
Piston is available together with piston pin as an assembly.

Connecting Rod Bearing

INFOID:0000000000893976

WHEN NEW CONNECTING ROD AND CRANKSHAFT ARE USED

1. Apply connecting rod big end diameter grade stamped on connecting rod side face to the row in the “Connecting Rod Bearing Selection Table”.

A : Oil hole
B : Management
C : Cylinder number
D : Big end diameter grade
E : Small end diameter grade
F : Front mark

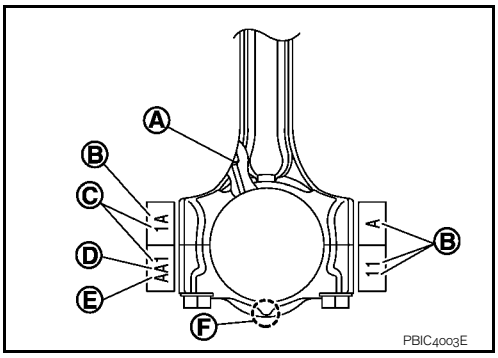

2. Apply crankshaft pin journal diameter grade stamped on crankshaft front side to the column in the “Connecting Rod Bearing Selection Table”.

A : No. 1 pin journal diameter grade
B : No. 2 pin journal diameter grade
C : No. 3 pin journal diameter grade
D : No. 4 pin journal diameter grade
E : No. 1 main journal diameter grade
F : No. 2 main journal diameter grade
G : No. 3 main journal diameter grade
H : No. 4 main journal diameter grade
I : No. 5 main journal diameter grade

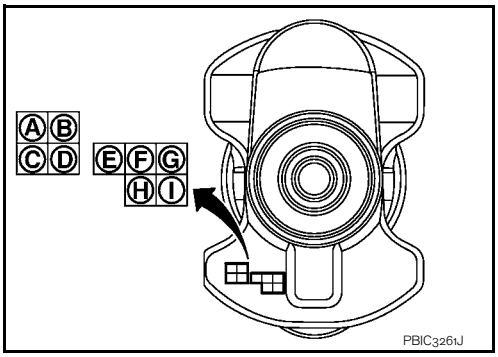

3. Read the symbol at the cross point of selected row and column in the “Connecting Rod Bearing Selection Table”.
4. Apply the symbol obtained to the “Connecting Rod Bearing Grade Table” to select connecting rod bearing.

WHEN CONNECTING ROD AND CRANKSHAFT ARE REUSED

1. Measure the dimensions of the connecting rod big end diameter and crankshaft pin journal diameter individually. Refer to EM-219, "Inspection".

cardiagn.com

2. Apply the measured dimension to the “Connecting Rod Bearing Selection Table”.
3. Read the symbol at the cross point of selected row and column in the “Connecting Rod Bearing Selection Table”.
4. Apply the symbol obtained to the “Connecting Rod Bearing Grade Table” to select connecting rod bearing.

CONNECTING ROD BEARING SELECTION TABLE

Crankshaft pin journal diameter Unit: mm (in) / Connecting rod big end diameter Unit: mm (in)		Mark	A	B	C	D	E	F	G	H	J	K	L	M	N
		Hole diameter	47.000 - 47.001 (1.8504 - 1.8504)	47.001 - 47.002 (1.8504 - 1.8505)	47.002 - 47.003 (1.8505 - 1.8505)	47.003 - 47.004 (1.8505 - 1.8505)	47.004 - 47.005 (1.8505 - 1.8506)	47.005 - 47.006 (1.8506 - 1.8506)	47.006 - 47.007 (1.8506 - 1.8507)	47.007 - 47.008 (1.8507 - 1.8507)	47.008 - 47.009 (1.8507 - 1.8507)	47.009 - 47.010 (1.8507 - 1.8508)	47.010 - 47.011 (1.8508 - 1.8508)	47.011 - 47.012 (1.8508 - 1.8509)	47.012 - 47.013 (1.8509 - 1.8509)
Mark	Axle diameter														
A	43.970 - 43.971 (1.7311 - 1.7311)		0	0	0	0	0	01	01	01	1	1	1	12	12
B	43.969 - 43.970 (1.7311 - 1.7311)		0	0	0	0	01	01	01	1	1	1	12	12	12
C	43.968 - 43.969 (1.7310 - 1.7311)		0	0	0	01	01	01	1	1	1	12	12	12	2
D	43.967 - 43.968 (1.7310 - 1.7310)		0	0	01	01	01	1	1	1	12	12	12	2	2
E	43.966 - 43.967 (1.7309 - 1.7310)		0	01	01	01	1	1	1	12	12	12	2	2	2
F	43.965 - 43.966 (1.7309 - 1.7309)		01	01	01	1	1	1	12	12	12	2	2	2	23
G	43.964 - 43.965 (1.7309 - 1.7309)		01	01	1	1	1	12	12	12	2	2	2	23	23
H	43.963 - 43.964 (1.7308 - 1.7309)		01	1	1	1	12	12	12	2	2	2	23	23	23
J	43.962 - 43.963 (1.7308 - 1.7308)		1	1	1	12	12	12	2	2	2	23	23	23	3
K	43.961 - 43.962 (1.7307 - 1.7308)		1	1	12	12	12	2	2	2	23	23	23	3	3
L	43.960 - 43.961 (1.7307 - 1.7307)		1	12	12	12	2	2	2	23	23	23	3	3	3
M	43.959 - 43.960 (1.7307 - 1.7307)		12	12	12	2	2	2	23	23	23	3	3	3	34
N	43.958 - 43.959 (1.7306 - 1.7307)		12	12	2	2	2	23	23	23	3	3	3	34	34
P	43.957 - 43.958 (1.7306 - 1.7306)		12	2	2	2	23	23	23	3	3	3	34	34	34
R	43.956 - 43.957 (1.7305 - 1.7306)		2	2	2	23	23	23	3	3	3	34	34	34	4
S	43.955 - 43.956 (1.7305 - 1.7305)		2	2	23	23	23	3	3	3	34	34	34	4	4
T	43.954 - 43.955 (1.7305 - 1.7305)		2	23	23	23	3	3	3	34	34	34	4	4	4
U	43.953 - 43.954 (1.7304 - 1.7305)		23	23	23	3	3	3	34	34	34	4	4	4	4

PBIC4077E

CONNECTING ROD BEARING GRADE TABLE

Connecting rod bearing grade table : **Refer to EM-244, "Connecting Rod Bearing".**

UNDERSIZE BEARINGS USAGE GUIDE

- When the specified connecting rod bearing oil clearance is not obtained with standard size connecting rod bearings, use undersize (US) bearings.
- When using undersize (US) bearing, measure the connecting rod bearing inner diameter with bearing installed, and grind the crankshaft pin so that the connecting rod bearing oil clearance satisfies the standard.

CAUTION:

cardiagn.com

In grinding crankshaft pin to use undersize bearings, keep the fillet R [1.5 - 1.7 mm (0.059 - 0.067 in)] (A).

Bearing undersize table

: Refer to EM-244, "Connecting Rod Bearing"

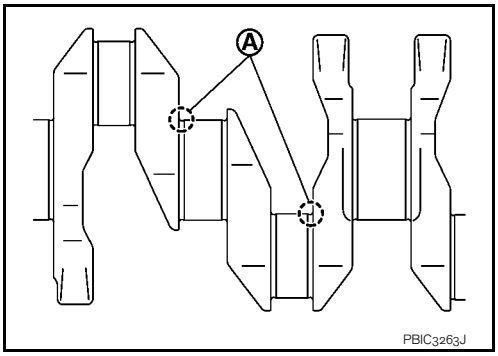

Main Bearing

INFOID:0000000000893977

WHEN NEW CYLINDER BLOCK AND CRANKSHAFT ARE USED

1. "Main Bearing Selection Table" rows correspond to main bearing housing grade on rear left side of cylinder block (L).

   A : Correction stamp
   B : Standard stamp
   C : Cylinder No. 1 bore grade
   D : Cylinder No. 2 bore grade
   E : Cylinder No. 3 bore grade
   F : Cylinder No. 4 bore grade
   G : No. 1 main bearing housing grade
   H : No. 2 main bearing housing grade
   I : No. 3 main bearing housing grade
   J : No. 4 main bearing housing grade
   K : No. 5 main bearing housing grade
   ⇦ : Engine front

   - If there is a correction stamp mark on cylinder block, use it as a correct reference.

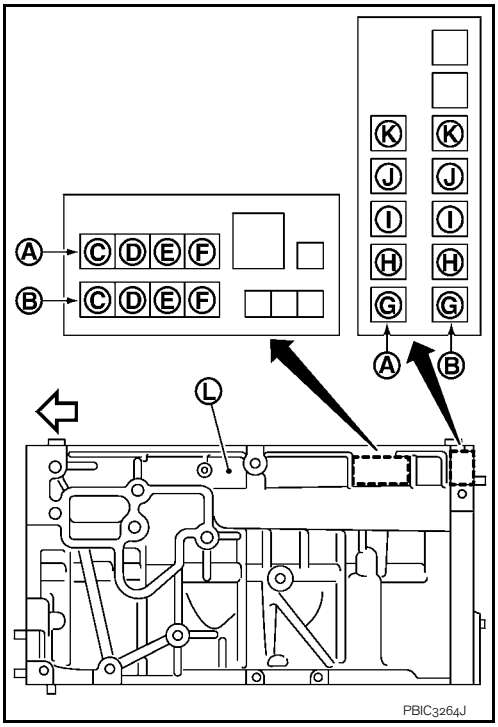

2. Apply main journal diameter grade stamped on crankshaft front side to column in the "Main Bearing Selection Table".

   A : No. 1 pin journal diameter grade
   B : No. 2 pin journal diameter grade
   C : No. 3 pin journal diameter grade
   D : No. 4 pin journal diameter grade
   E : No. 1 main journal diameter grade
   F : No. 2 main journal diameter grade
   G : No. 3 main journal diameter grade
   H : No. 4 main journal diameter grade
   I : No. 5 main journal diameter grade

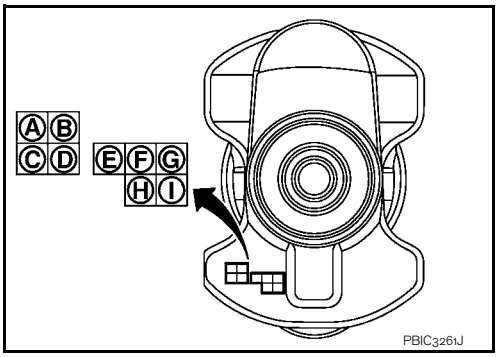

3. Read the symbol at the cross point of selected row and column in the "Main Bearing Selection Table".
   CAUTION:
   There are two main bearing selection tables. One is for No. 1, 4 and 5 journals and the other is for No. 2 and 3 journals. Make certain to use the appropriate table. This is due to differences in the specified clearances.

cardiagn.com

4. Apply the symbol obtained to the “Main Bearing Grade Table” to select main bearing.
NOTE:
Service part is available as a set of both upper and lower.

WHEN CYLINDER BLOCK AND CRANKSHAFT ARE REUSED

1. Measure the dimensions of the cylinder block main bearing housing inner diameter and crankshaft main journal diameter individually. Refer to EM-219, "Inspection".
2. Apply the measured dimension to the “Main Bearing Selection Table”.
3. Read the symbol at the cross point of selected row and column in the “Main Bearing Selection Table”.
CAUTION:
There are two main bearing selection tables. One is for No. 1, 4 and 5 journals and the other is for No. 2 and 3 journals. Make certain to use the appropriate table. This is due to differences in the specified clearances.
4. Apply the symbol obtained to the “Main Bearing Grade Table” to select main bearing.
NOTE:
Service part is available as a set of both upper and lower.

MAIN BEARING SELECTION TABLE (No. 1, 4 AND 5 JOURNAL)

Crankshaft main journal diameter Unit: mm (in) / Cylinder block main bearing housing inner diameter Unit: mm (in)		Mark	A	B	C	D	E	F	G	H	J	K	L	M	N	P	R	S	T	U	V	W
		Hole diameter	55.997 - 55.998 (2.2046 - 2.2046)	55.998 - 55.999 (2.2046 - 2.2047)	55.999 - 56.000 (2.2047 - 2.2047)	56.000 - 56.001 (2.2047 - 2.2048)	56.001 - 56.002 (2.2048 - 2.2048)	56.002 - 56.003 (2.2048 - 2.2048)	56.003 - 56.004 (2.2048 - 2.2049)	56.004 - 56.005 (2.2049 - 2.2049)	56.005 - 56.006 (2.2049 - 2.2050)	56.006 - 56.007 (2.2050 - 2.2050)	56.007 - 56.008 (2.2050 - 2.2050)	56.008 - 56.009 (2.2050 - 2.2051)	56.009 - 56.010 (2.2051 - 2.2051)	56.010 - 56.011 (2.2051 - 2.2052)	56.011 - 56.012 (2.2052 - 2.2052)	56.012 - 56.013 (2.2052 - 2.2052)	56.013 - 56.014 (2.2052 - 2.2053)	56.014 - 56.015 (2.2053 - 2.2053)	56.015 - 56.016 (2.2053 - 2.2053)	56.016 - 56.017 (2.2053 - 2.2054)
Mark	Axle diameter																					
A	51.978 - 51.979 (2.0464 - 2.0464)		0	0	0	0	0	0	0	01	01	01	1	1	1	12	12	12	2	2	2	23
B	51.977 - 51.978 (2.0463 - 2.0464)		0	0	0	0	0	0	01	01	01	1	1	1	12	12	12	2	2	2	23	23
C	51.976 - 51.977 (2.0463 - 2.0463)		0	0	0	0	0	01	01	01	1	1	1	12	12	12	2	2	2	23	23	23
D	51.975 - 51.976 (2.0463 - 2.0463)		0	0	0	0	01	01	01	1	1	1	12	12	12	2	2	2	23	23	23	3
E	51.974 - 51.975 (2.0462 - 2.0463)		0	0	0	01	01	01	1	1	1	12	12	12	2	2	2	23	23	23	3	3
F	51.973 - 51.974 (2.0462 - 2.0462)		0	0	01	01	01	1	1	1	12	12	12	2	2	2	23	23	23	3	3	3
G	51.972 - 51.973 (2.0461 - 2.0462)		0	01	01	01	1	1	1	12	12	12	2	2	2	23	23	23	3	3	3	34
H	51.971 - 51.972 (2.0461 - 2.0461)		01	01	01	1	1	1	12	12	12	2	2	2	23	23	23	3	3	3	34	34
J	51.970 - 51.971 (2.0461 - 2.0461)		01	01	1	1	1	12	12	12	2	2	2	23	23	23	3	3	3	34	34	34
K	51.969 - 51.970 (2.0460 - 2.0461)		01	1	1	1	12	12	12	2	2	2	23	23	23	3	3	3	34	34	34	4
L	51.968 - 51.969 (2.0460 - 2.0460)		1	1	1	12	12	12	2	2	2	23	23	23	3	3	3	34	34	34	4	4
M	51.967 - 51.968 (2.0459 - 2.0460)		1	1	12	12	12	2	2	2	23	23	23	3	3	3	34	34	34	4	4	4
N	51.966 - 51.967 (2.0459 - 2.0459)		1	12	12	12	2	2	2	23	23	23	3	3	3	34	34	34	4	4	4	45
P	51.965 - 51.966 (2.0459 - 2.0459)		12	12	12	2	2	2	23	23	23	3	3	3	34	34	34	4	4	4	45	45
R	51.964 - 51.965 (2.0458 - 2.0459)		12	12	2	2	2	23	23	23	3	3	3	34	34	34	4	4	4	45	45	45
S	51.963 - 51.964 (2.0458 - 2.0458)		12	2	2	2	23	23	23	3	3	3	34	34	34	4	4	4	45	45	45	5
T	51.962 - 51.963 (2.0457 - 2.0458)		2	2	2	23	23	23	3	3	3	34	34	34	4	4	4	45	45	45	5	5
U	51.961 - 51.962 (2.0457 - 2.0457)		2	2	23	23	23	3	3	3	34	34	34	4	4	4	45	45	45	5	5	5
V	51.960 - 51.961 (2.0457 - 2.0457)		2	23	23	23	3	3	3	34	34	34	4	4	4	45	45	45	5	5	5	5
W	51.959 - 51.960 (2.0456 - 2.0457)		23	23	23	3	3	3	34	34	34	4	4	4	45	45	45	5	5	5	5	5

PBIC4078E

cardiagn.com

MAIN BEARING SELECTION TABLE (No. 2 AND 3 JOURNAL)

Crankshaft main journal diameter Unit: mm (in) / Cylinder block main bearing housing inner diameter Unit: mm (in)		Mark	A	B	C	D	E	F	G	H	J	K	L	M	N	P	R	S	T	U	V	W
		Hole diameter	55.997 - 55.998 (2.2046 - 2.2046)	55.998 - 55.999 (2.2046 - 2.2047)	55.999 - 56.000 (2.2047 - 2.2047)	56.000 - 56.001 (2.2047 - 2.2048)	56.001 - 56.002 (2.2048 - 2.2048)	56.002 - 56.003 (2.2048 - 2.2048)	56.003 - 56.004 (2.2048 - 2.2049)	56.004 - 56.005 (2.2049 - 2.2049)	56.005 - 56.006 (2.2049 - 2.2050)	56.006 - 56.007 (2.2050 - 2.2050)	56.007 - 56.008 (2.2050 - 2.2050)	56.008 - 56.009 (2.2050 - 2.2051)	56.009 - 56.010 (2.2051 - 2.2051)	56.010 - 56.011 (2.2051 - 2.2052)	56.011 - 56.012 (2.2052 - 2.2052)	56.012 - 56.013 (2.2052 - 2.2052)	56.013 - 56.014 (2.2052 - 2.2053)	56.014 - 56.015 (2.2053 - 2.2053)	56.015 - 56.016 (2.2053 - 2.2053)	56.016 - 56.017 (2.2053 - 2.2054)
Mark	Axle diameter																					
A	51.978 - 51.979 (2.0464 - 2.0464)		1	12	12	12	2	2	2	23	23	23	3	3	3	34	34	34	4	4	4	45
B	51.977 - 51.978 (2.0463 - 2.0464)		12	12	12	2	2	2	23	23	23	3	3	3	34	34	34	4	4	4	45	45
C	51.976 - 51.977 (2.0463 - 2.0463)		12	12	2	2	2	23	23	23	3	3	3	34	34	34	4	4	4	45	45	45
D	51.975 - 51.976 (2.0463 - 2.0463)		12	2	2	2	23	23	23	3	3	3	34	34	34	4	4	4	45	45	45	5
E	51.974 - 51.975 (2.0462 - 2.0463)		2	2	2	23	23	23	3	3	3	34	34	34	4	4	4	45	45	45	5	5
F	51.973 - 51.974 (2.0462 - 2.0462)		2	2	23	23	23	3	3	3	34	34	34	4	4	4	45	45	45	5	5	5
G	51.972 - 51.973 (2.0461 - 2.0462)		2	23	23	23	3	3	3	34	34	34	4	4	4	45	45	45	5	5	5	56
H	51.971 - 51.972 (2.0461 - 2.0461)		23	23	23	3	3	3	34	34	34	4	4	4	45	45	45	5	5	5	56	56
J	51.970 - 51.971 (2.0461 - 2.0461)		23	23	3	3	3	34	34	34	4	4	4	45	45	45	5	5	5	56	56	56
K	51.969 - 51.970 (2.0460 - 2.0461)		23	3	3	3	34	34	34	4	4	4	45	45	45	5	5	5	56	56	56	6
L	51.968 - 51.969 (2.0460 - 2.0460)		3	3	3	34	34	34	4	4	4	45	45	45	5	5	5	56	56	56	6	6
M	51.967 - 51.968 (2.0459 - 2.0460)		3	3	34	34	34	4	4	4	45	45	45	5	5	5	56	56	56	6	6	6
N	51.966 - 51.967 (2.0459 - 2.0459)		3	34	34	34	4	4	4	45	45	45	5	5	5	56	56	56	6	6	6	67
P	51.965 - 51.966 (2.0459 - 2.0459)		34	34	34	4	4	4	45	45	45	5	5	5	56	56	56	6	6	6	67	67
R	51.964 - 51.965 (2.0458 - 2.0459)		34	34	4	4	4	45	45	45	5	5	5	56	56	56	6	6	6	67	67	67
S	51.963 - 51.964 (2.0458 - 2.0458)		34	4	4	4	45	45	45	5	5	5	56	56	56	6	6	6	67	67	67	7
T	51.962 - 51.963 (2.0457 - 2.0458)		4	4	4	45	45	45	5	5	5	56	56	56	6	6	6	67	67	67	7	7
U	51.961 - 51.962 (2.0457 - 2.0457)		4	4	45	45	45	5	5	5	56	56	56	6	6	6	67	67	67	7	7	7
V	51.960 - 51.961 (2.0457 - 2.0457)		4	45	45	45	5	5	5	56	56	56	6	6	6	67	67	67	7	7	7	7
W	51.959 - 51.960 (2.0456 - 2.0457)		45	45	45	5	5	5	56	56	56	6	6	6	67	67	67	7	7	7	7	7

PBIC4079E

MAIN BEARING GRADE TABLE (ALL JOURNALS)

Main bearing grade table (All journals) : Refer to EM-245, "Main Bearing".

UNDERSIZE BEARING USAGE GUIDE

- When the specified main bearing oil clearance is not obtained with standard size main bearings, use undersize (US) bearing.
- When using undersize (US) bearing, measure the main bearing inner diameter with bearing installed, and grind main journal so that the main bearing oil clearance satisfies the standard.

CAUTION:

cardiagn.com

In grinding crankshaft main journal to use undersize bearings, keep the fillet R [1.5 - 1.7 mm (0.059 - 0.067 in)] (A).

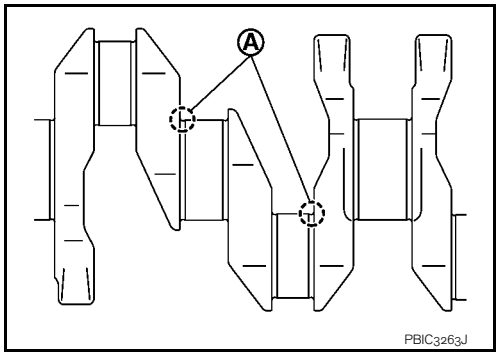

Bearing undersize table:

Refer to EM-245, "Main Bearing".

cardiagn.com

SERVICE DATA AND SPECIFICATIONS (SDS)

SERVICE DATA AND SPECIFICATIONS (SDS)

General Specification

INFOID:0000000000893978

GENERAL SPECIFICATIONS

Engine type		MR20DE
Cylinder arrangement		In-line 4
Displacement cm^3 (cu in)		1,997 (121.86)
Bore and stroke mm (in)		84.0 x 90.1 (3.307 x 3.547)
Valve arrangement		DOHC
Firing order		1-3-4-2
Number of piston rings	Compression	2
	Oil	1
Compression ratio		10.2
Compression pressure kPa (bar, kg/cm^2, psi) / 250 rpm	Standard	1,390 (13.9, 14.2, 202)
	Minimum	1,140 (11.4, 11.6, 165)
	Differential limit between cylinders	100 (1.0, 1.0, 15)
Valve timing ( ) : Valve timing control “ON”	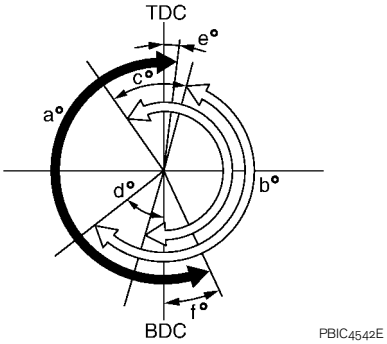	

Unit: degree

a	b	c	d	e	f
220	232	-13 (27)	65 (25)	7	33

Drive Belt

INFOID:0000000000902337

DRIVE BELT

Tension of drive belt	Auto adjustment by auto-tensioner

Spark Plug

INFOID:0000000000893980

SPARK PLUG

Unit: mm (in)

Make	NGK
Standard type	PLZKAR6A-11
Gap (Nominal)	1.1 (0.043)

Exhaust Manifold

INFOID:0000000000893982

EXHAUST MANIFOLD

cardiagn.com

Unit: mm (in)

Items		Limit
Surface distortion	Each exhaust port	0.3 (0.012)
	Entire part	0.7 (0.028)

Camshaft

INFOID:0000000000893983

CAMSHAFT

Unit: mm (in)

Items		Standard	Limit
Camshaft journal oil clearance	No. 1	0.045 - 0.086 (0.0018 - 0.0034)	0.15 (0.0059)
	No. 2, 3, 4, 5	0.030 - 0.071 (0.0012 - 0.0028)	
Camshaft bracket inner diameter	No. 1	28.000 - 28.021 (1.1024 - 1.1032)	—
	No. 2, 3, 4, 5	25.000 - 25.021 (0.9843 - 0.9851)	—
Camshaft journal diameter	No. 1	27.935 - 27.955 (1.0998 - 1.1006)	—
	No. 2, 3, 4, 5	24.950 - 24.970 (0.9823 - 0.9381)	—
Camshaft end play		0.075 - 0.153 (0.0030 - 0.0060)	0.24 (0.0094)
Camshaft cam height “A”	Intake	45.265 - 45.455 (1.7821 - 1.7896)	45.065 (1.7742)
	Exhaust	43.775 - 43.965 (1.7234 - 1.7309)	43.575 (1.7155)
Camshaft runout [TIR*]		Less than 0.02 (0.0008)	0.05 (0.0020)
Camshaft sprocket runout [TIR*]		—	0.15 (0.0059)

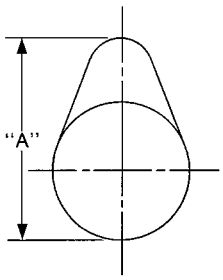

SEM671

*: Total indicator reading

VALVE LIFTER

Unit: mm (in)

Items		Standard
Valve lifter outer diameter	Intake	33.977 - 33.987 (1.3377 - 1.3381)
	Exhaust	29.977 - 29.987 (1.1802 - 1.1806)
Valve lifter hole diameter	Intake	34.000 - 34.021 (1.3386 - 1.3394)
	Exhaust	30.000 - 30.021 (1.1811 - 1.1819)
Valve lifter clearance		0.013 - 0.044 (0.0005 - 0.0017)

VALVE CLEARANCE

Unit: mm (in)

Items	Cold	Hot* (reference data)
Intake	0.26 - 0.34 (0.010 - 0.013)	0.304 - 0.416 (0.012 - 0.016)
Exhaust	0.29 - 0.37 (0.011 - 0.015)	0.308 - 0.432 (0.012 - 0.017)

*: Approximately 80°C (176°F)

AVAILABLE VALVE LIFTER

cardiagn.com

Thickness mm (in)	Identification mark

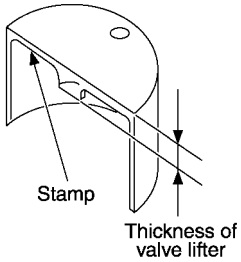

KBIA0119E

3.00 (0.1181)	300
3.02 (0.1189)	302
3.04 (0.1197)	304
3.06 (0.1205)	306
3.08 (0.1213)	308
3.10 (0.1220)	310
3.12 (0.1228)	312
3.14 (0.1236)	314
3.16 (0.1244)	316
3.18 (0.1252)	318
3.20 (0.1260)	320
3.22 (0.1268)	322
3.24 (0.1276)	324
3.26 (0.1283)	326
3.28 (0.1291)	328
3.30 (0.1299)	330
3.32 (0.1307)	332
3.34 (0.1315)	334
3.36 (0.1323)	336
3.38 (0.1331)	338
3.40 (0.1339)	340
3.42 (0.1346)	342
3.44 (0.1354)	344
3.46 (0.1362)	346
3.48 (0.1370)	348
3.50 (0.1378)	350

Cylinder Head

INFOID:0000000000893984

CYLINDER HEAD

Unit: mm (in)

Items	Standard	Limit
Head surface distortion	—	0.1 (0.004)

cardiagn.com

Items	Standard	Limit
Normal cylinder head height “H”	130.9 (5.15)	—

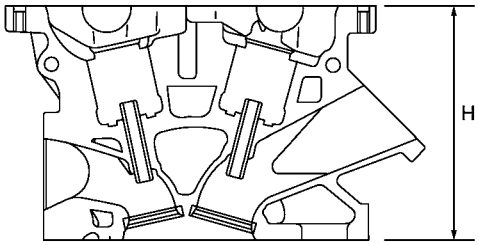

PBIC0924E

VALVE DIMENSIONS

Unit: mm (in)

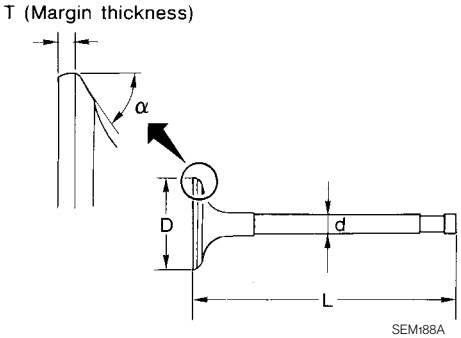

SEM188A

Valve head diameter “D”	Intake	33.8 - 34.1 (1.331 - 1.343)
	Exhaust	27.6 - 27.9 (1.087 - 1.098)
Valve length “L”	Intake	106.27 (4.184)
	Exhaust	105.26 (4.144)
Valve stem diameter “d”	Intake	5.465 - 5.480 (0.2152 - 0.2157)
	Exhaust	5.455 - 5.470 (0.2148 - 0.2154)
Valve seat angle “α”		45°15′ - 45°45′
Valve margin “T”	Intake	1.1 (0.043)
	Exhaust	1.2 (0.047)

VALVE GUIDE

Unit: mm (in)

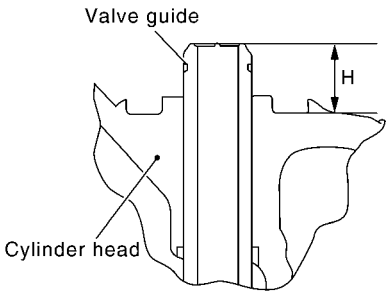

PBIC2187E

Items	Standard	Oversize (service) [0.2 (0.008)]

cardiagn.com

Valve guide	Outer diameter	9.523 - 9.534 (0.3749 - 0.3754)	9.723 - 9.734 (0.3828 - 0.3832)
	Inner diameter (Finished size)	5.500 - 5.518 (0.2165 - 0.2172)	
Cylinder head valve guide hole diameter		9.475 - 9.496 (0.3730 - 0.3739)	9.675 - 9.696 (0.3809 - 0.3817)
Interference fit of valve guide		0.027 - 0.059 (0.0011 - 0.0023)	
Items		Standard	Limit
Valve guide clearance	Intake	0.020 - 0.053 (0.0008 - 0.0021)	0.1 (0.004)
	Exhaust	0.030 - 0.063 (0.0012 - 0.0025)	
Projection length “H”		13.35 - 13.65 (0.526 - 0.537)	

VALVE SEAT

Unit: mm (in)

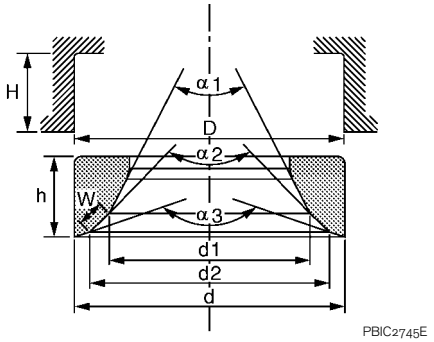

Items		Standard	Oversize (service) [0.5 (0.02)]
Cylinder head seat recess diameter “D”	Intake	34.700 - 34.727 (1.3661 - 1.3672)	35.200 - 35.227 (1.3858 - 1.3869)
	Exhaust	28.700 - 28.727 (1.1299 - 1.1310)	29.200 - 29.227 (1.1496 - 1.1507)
Valve seat outer diameter “d”	Intake	34.808 - 34.824 (1.3704 - 1.3710)	35.308 - 35.324 (1.3901 - 1.3907)
	Exhaust	28.808 - 28.824 (1.1342 - 1.1348)	29.308 - 29.324 (1.1539 - 1.1545)
Valve seat interference fit		0.081 - 0.124 (0.0032 - 0.0049)	
Diameter “d1”*1	Intake	31.8 (1.252)	
	Exhaust	25.3 (0.996)	
Diameter “d2”*2	Intake	33.1 - 33.6 (1.303 - 1.323)	
	Exhaust	26.9 - 27.4 (1.059 - 1.079)	
Angle “α1”	Intake	60°	
	Exhaust	45°	
Angle “α2”		88°45′ - 90°15′	
Angle “α3”		120°	
Contacting width “W”*3	Intake	1.0 - 1.4 (0.039 - 0.055)	
	Exhaust	1.2 - 1.6 (0.047 - 0.063)	
Height “h”	Intake	5.9 - 6.0 (0.232 - 0.236)	5.03 - 5.13 (0.1980 - 0.2020)
	Exhaust		4.95 - 5.05 (0.1949 - 0.1988)
Depth “H”	Intake	6.04 (0.2378)	
	Exhaust	6.05 (0.2382)	

*1: Diameter made by intersection point of conic angles “α1” and “α2”

*2: Diameter made by intersection point of conic angles “α2” and “α3”

*3: Machining data

VALVE SPRING

cardiagn.com

Items	Standard	
	Intake	Exhaust
Free height	45.59 - 46.96 mm (1.7949 - 1.8488 in)	45.13 - 46.40 mm (1.7768 - 1.8268 in)
Installation height	35.30 mm (1.390 in)	35.30 mm (1.390 in)
Installation load	151 - 175 N (15.4 - 17.9 kg, 34 - 39 lb)	140 - 162 N (14.3 - 16.5 kg, 31 - 36 lb)
Height during valve open	25.70 mm (1.0118 in)	26.88 mm (1.0583 in)
Load with valve open	333 - 379 N (34.0 - 38.7 kg, 75 - 85 lb)	283 - 323 N (28.9 - 32.9 kg, 64 - 73 lb)
Identification color	Green	Purple

Items	Limit
Valve spring squareness	1.9 mm (0.075 in)

Cylinder Block

INFOID:0000000000893985

CYLINDER BLOCK

Unit: mm (in)

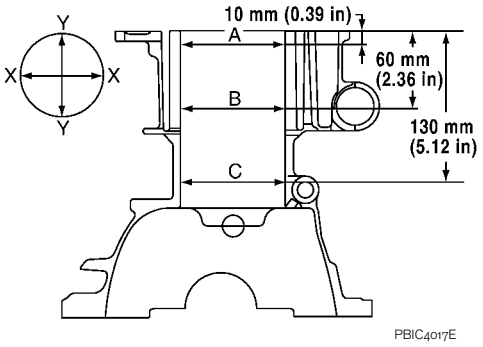

Cylinder block top surface distortion	Limit		0.1 (0.004)
Cylinder bore inner diameter	Standard	Grade No. 1	84.000 - 84.010 (3.3071 - 3.3075)
		Grade No. 2	84.010 - 84.020 (3.3075 - 3.3079)
Out-of-round	Limit		0.015 (0.0006)
Taper			0.010 (0.0004)
Main bearing housing inner diameter grade		Grade No. A	55.997 - 55.998 (2.2046 - 2.2046)
		Grade No. B	55.998 - 55.999 (2.2046 - 2.2047)
		Grade No. C	55.999 - 56.000 (2.2047 - 2.2047)
		Grade No. D	56.000 - 56.001 (2.2047 - 2.2048)
		Grade No. E	56.001 - 56.002 (2.2048 - 2.2048)
		Grade No. F	56.002 - 56.003 (2.2048 - 2.2048)
		Grade No. G	56.003 - 56.004 (2.2048 - 2.2049)
		Grade No. H	56.004 - 56.005 (2.2049 - 2.2049)
		Grade No. J	56.005 - 56.006 (2.2049 - 2.2050)
		Grade No. K	56.006 - 56.007 (2.2050 - 2.2050)
		Grade No. L	56.007 - 56.008 (2.2050 - 2.2050)
		Grade No. M	56.008 - 56.009 (2.2050 - 2.2051)
		Grade No. N	56.009 - 56.010 (2.2051 - 2.2051)
		Grade No. P	56.010 - 56.011 (2.2051 - 2.2052)
		Grade No. R	56.011 - 56.012 (2.2052 - 2.2052)
		Grade No. S	56.012 - 56.013 (2.2052 - 2.2052)
		Grade No. T	56.013 - 56.014 (2.2052 - 2.2053)
		Grade No. U	56.014 - 56.015 (2.2053 - 2.2053)
		Grade No. V	56.015 - 56.016 (2.2053 - 2.2053)
		Grade No. W	56.016 - 56.017 (2.2053 - 2.2054)

AVAILABLE PISTON

cardiagn.com

Unit: mm (in)

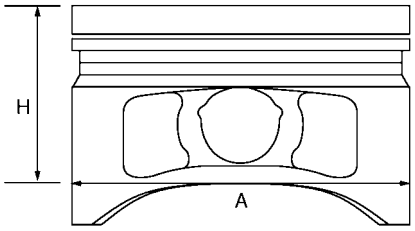

PBICo188E

Piston skirt diameter “A”	Standard	Grade No. 1	83.970 - 83.980 (3.3059 - 3.3063)
		Grade No. 2	83.980 - 83.990 (3.3063 - 3.3067)
Measure point “H”			39.9 (1.571)
Piston pin hole diameter			19.993 - 19.999 (0.7871 - 0.7874)
Piston to cylinder bore clearance		Standard	0.020 - 0.040 (0.0008 - 0.0016)
		Limit	0.08 (0.0031)

PISTON RING

Unit: mm (in)

Items		Standard	Limit
Piston ring side clearance	Top	0.04 - 0.08 (0.002 - 0.003)	0.11 (0.0043)
	2nd	0.03 - 0.07 (0.001 - 0.003)	0.10 (0.0039)
	Oil ring	0.015 - 0.185 (0.001 - 0.007)	—
Piston ring end gap	Top	0.20 - 0.30 (0.008 - 0.012)	0.51 (0.020)
	2nd	0.50 - 0.65 (0.020 - 0.026)	0.83 (0.033)
	Oil (rail ring)	0.15 - 0.45 (0.006 - 0.018)	0.78 (0.031)

PISTON PIN

Unit: mm (in)

Items	Standard	Limit
Piston pin outer diameter	19.989 - 19.995 (0.7870 - 0.7872)	—
Piston to piston pin oil clearance	0.002 - 0.006 (0.0001 - 0.0002)	—

CONNECTING ROD

Unit: mm (in)

Center distance		138.97 - 139.07 (5.471 - 5.475)
Bend [per 100 (3.94)]	Limit	0.15 (0.0059)
Torsion [per 100 (3.94)]	Limit	0.30 (0.0118)
Connecting rod bushing inner diameter*	Standard	20.000 - 20.012 (0.7874 - 0.7879)
Connecting rod bushing oil clearance	Standard	0.005 - 0.023 (0.0002 - 0.0009)
	Limit	0.03 (0.0012)

cardiagn.com

Connecting rod side clearance	Standard	0.20 - 0.35 (0.0079 - 0.0138)
	Limit	0.40 (0.0157)
Connecting rod big end diameter	Grade No. A	47.000 - 47.001 (1.8504 - 1.8504)
	Grade No. B	47.001 - 47.002 (1.8504 - 1.8505)
	Grade No. C	47.002 - 47.003 (1.8505 - 1.8505)
	Grade No. D	47.003 - 47.004 (1.8505 - 1.8505)
	Grade No. E	47.004 - 47.005 (1.8505 - 1.8506)
	Grade No. F	47.005 - 47.006 (1.8506 - 1.8506)
	Grade No. G	47.006 - 47.007 (1.8506 - 1.8507)
	Grade No. H	47.007 - 47.008 (1.8507 - 1.8507)
	Grade No. J	47.008 - 47.009 (1.8507- 1.8507)
	Grade No. K	47.009 - 47.010 (1.8507- 1.8508)
	Grade No. L	47.010 - 47.011 (1.8508 - 1.8508)
	Grade No. M	47.011 - 47.012 (1.8508 - 1.8509)
	Grade No. N	47.012 - 47.013 (1.8509 - 1.8509)

*: After installing in connecting rod

CRANKSHAFT

Unit: mm (in)

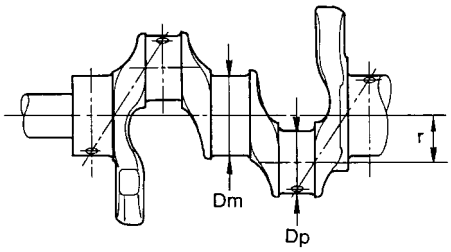

SEM645

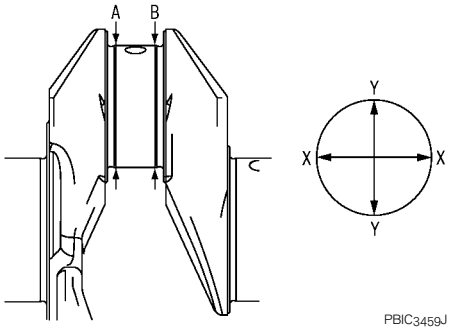

PBIC3459J

Center distance “r”		44.89 - 44.97 (1.7673 - 1.7705)
Out-of-round	Limit	0.0035 (0.0001)
Taper	Limit	
Runout [TIR*]	Standard	0.05 (0.0020)
	Limit	0.10 (0.0039)
Crankshaft end play	Standard	0.10 - 0.26 (0.0039 - 0.0102)
	Limit	0.30 (0.012)

cardiagn.com

Crankshaft pin journal diameter grade. “Dp”	Grade No. A	43.970 - 43.971 (1.7311 - 1.7311)
	Grade No. B	43.969 - 43.970 (1.7311 - 1.7311)
	Grade No. C	43.968 - 43.969 (1.7310 - 1.7311)
	Grade No. D	43.967 - 43.968 (1.7310 - 1.7310)
	Grade No. E	43.966 - 43.967 (1.7309 - 1.7310)
	Grade No. F	43.965 - 43.966 (1.7309 - 1.7309)
	Grade No. G	43.964 - 43.965 (1.7309 - 1.7309)
	Grade No. H	43.963 - 43.964 (1.7308 - 1.7309)
	Grade No. J	43.962 - 43.963 (1.7308 - 1.7308)
	Grade No. K	43.961 - 43.962 (1.7307 - 1.7308)
	Grade No. L	43.960 - 43.961 (1.7307 - 1.7307)
	Grade No. M	43.959 - 43.960 (1.7307 - 1.7307)
	Grade No. N	43.958 - 43.959 (1.7306 - 1.7307)
	Grade No. P	43.957 - 43.958 (1.7306 - 1.7306)
	Grade No. R	43.956 - 43.957 (1.7305 - 1.7306)
	Grade No. S	43.955 - 43.956 (1.7305 - 1.7305)
	Grade No. T	43.954 - 43.955 (1.7305 - 1.7305)
	Grade No. U	43.953 - 43.954 (1.7304 - 1.7305)
Crankshaft main journal diameter grade. “Dm”	Grade No. A	51.978 - 51.979 (2.0464 - 2.0464)
	Grade No. B	51.977 - 51.978 (2.0463 - 2.0464)
	Grade No. C	51.976 - 51.977 (2.0463 - 2.0463)
	Grade No. D	51.975 - 51.976 (2.0463 - 2.0463)
	Grade No. E	51.974 - 51.975 (2.0462 - 2.0463)
	Grade No. F	51.973 - 51.974 (2.0462 - 2.0462)
	Grade No. G	51.972 - 51.973 (2.0461 - 2.0462)
	Grade No. H	51.971 - 51.972 (2.0461 - 2.0461)
	Grade No. J	51.970 - 51.971 (2.0461 - 2.0461)
	Grade No. K	51.969 - 51.970 (2.0460 - 2.0461)
	Grade No. L	51.968 - 51.969 (2.0460 - 2.0460)
	Grade No. M	51.967 - 51.968 (2.0459 - 2.0460)
	Grade No. N	51.966 - 51.967 (2.0459 - 2.0459)
	Grade No. P	51.965 - 51.966 (2.0459 - 2.0459)
	Grade No. R	51.964 - 51.965 (2.0458 - 2.0459)
	Grade No. S	51.963 - 51.964 (2.0458 - 2.0458)
	Grade No. T	51.962 - 51.963 (2.0457 - 2.0458)
	Grade No. U	51.961 - 51.962 (2.0457 - 2.0457)
	Grade No. V	51.960 - 51.961 (2.0457 - 2.0457)
	Grade No. W	51.959 - 51.960 (2.0456 - 2.0457)

*: Total indicator reading

Connecting Rod Bearing

INFOID:0000000000893987

CONNECTING ROD BEARING GRADE TABLE

Grade number		Thickness mm (in)	Identification color	Remarks
0		1.494 - 1.497 (0.0588 - 0.0589)	Black	Grade and color are the same for upper and lower bearings.
1		1.497 - 1.500 (0.0589 - 0.0591)	Brown	
2		1.500 - 1.503 (0.0591 - 0.0592)	Green	
3		1.503 - 1.506 (0.0592 - 0.0593)	Yellow	
4		1.506 - 1.509 (0.0593 - 0.0594)	Blue	
01	UPR	1.494 - 1.497 (0.0588 - 0.0589)	Black	Grade and color are different between upper and lower bearings.
	LWR	1.497 - 1.500 (0.0589 - 0.0591)	Brown	
12	UPR	1.497 - 1.500 (0.0589 - 0.0591)	Brown	
	LWR	1.500 - 1.503 (0.0591 - 0.0592)	Green	
23	UPR	1.500 - 1.503 (0.0591 - 0.0592)	Green	
	LWR	1.503 - 1.506 (0.0592 - 0.0593)	Yellow	
34	UPR	1.503 - 1.506 (0.0592 - 0.0593)	Yellow	
	LWR	1.506 - 1.509 (0.0593 - 0.0594)	Blue	

cardiagn.com

UNDERSIZE TABLE

Unit: mm (in)

Item	Thickness	Crank pin journal diameter
US 0.25 (0.0098)	1.623 - 1.631 (0.0639 - 0.0642)	Grind so that bearing clearance is the specified value.

CONNECTING ROD BEARING OIL CLEARANCE

Unit: mm (in)

Connecting rod bearing oil clearance	Standard	0.037 - 0.047 (0.0015 - 0.0019)
	Limit	0.07 (0.0028)

Main Bearing

INFOID:0000000000893986

MAIN BEARING GRADE TABLE (ALL JOURNALS)

Unit: mm (in)

Grade number		Thickness	Identification color	Remarks
0		1.996 - 1.999 (0.0786 - 0.0787)	Black	Grade and color are the same for upper and lower bearings.
1		1.999 - 2.002 (0.0787 - 0.0788)	Brown	
2		2.002 - 2.005 (0.0788 - 0.0789)	Green	
3		2.005 - 2.008 (0.0789 - 0.0791)	Yellow	
4		2.008 - 2.011 (0.0791 - 0.0792)	Blue	
5		2.011 - 2.014 (0.0792 - 0.0793)	Pink	
6		2.014 - 2.017 (0.0793 - 0.0794)	Purple	
7		2.017 - 2.020 (0.0794 - 0.0795)	White	
01	UPR	1.996 - 1.999 (0.0786 - 0.0787)	Black	Grade and color are different between upper and lower bearings.
	LWR	1.999 - 2.002 (0.0787 - 0.0788)	Brown	
12	UPR	1.999 - 2.002 (0.0787 - 0.0788)	Brown	
	LWR	2.002 - 2.005 (0.0788 - 0.0789)	Green	
23	UPR	2.002 - 2.005 (0.0788 - 0.0789)	Green	
	LWR	2.005 - 2.008 (0.0789 - 0.0791)	Yellow	
34	UPR	2.005 - 2.008 (0.0789 - 0.0791)	Yellow	
	LWR	2.008 - 2.011 (0.0791 - 0.0792)	Blue	
45	UPR	2.008 - 2.011 (0.0791 - 0.0792)	Blue	
	LWR	2.011 - 2.014 (0.0792 - 0.0793)	Pink	
56	UPR	2.011 - 2.014 (0.0792 - 0.0793)	Pink	
	LWR	2.014 - 2.017 (0.0793 - 0.0794)	Purple	
67	UPR	2.014 - 2.017 (0.0793 - 0.0794)	Purple	
	LWR	2.017 - 2.020 (0.0794 - 0.0795)	White	

UNDERSIZE TABLE

Unit: mm (in)

Item	Thickness	Main journal diameter
US 0.25 (0.0098)	2.126 - 2.134 (0.0837 - 0.0840)	Grind so that bearing clearance is the specified value.

MAIN BEARING OIL CLEARANCE

Unit: mm (in)

Main bearing oil clearance	Standard	No. 1, 4 and 5	0.024 - 0.034 (0.0009 - 0.0013)
		No. 2 and 3	0.012 - 0.022 (0.0005 - 0.0009)
	Limit		0.065 (0.0026)

cardiagn.com

SYMPTOM DIAGNOSIS

NOISE, VIBRATION AND HARSHNESS (NVH) TROUBLESHOOTING

NVH Troubleshooting - Engine Noise

INFOID:0000000001060030

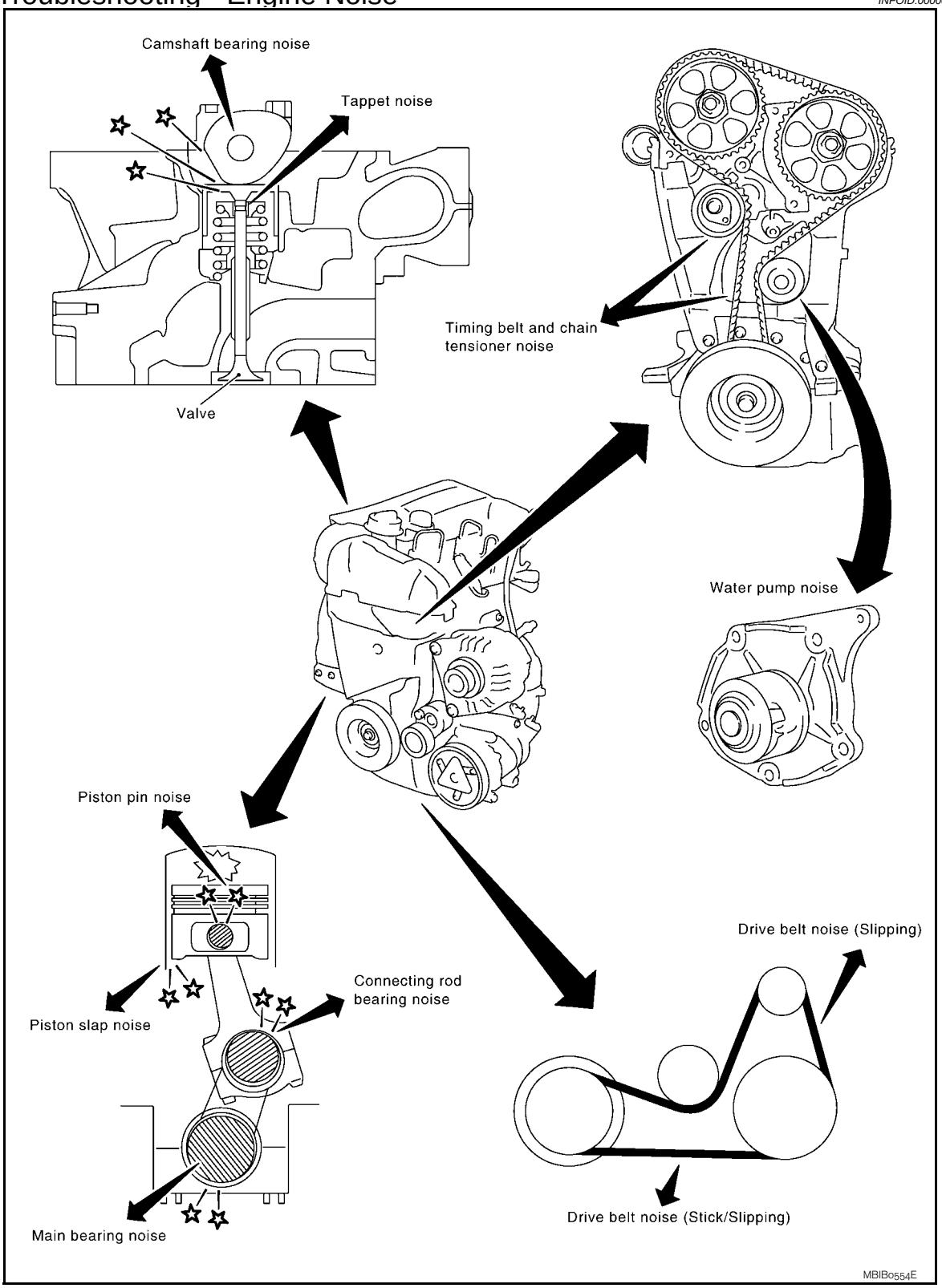

Use the Chart Below to Help You Find the Cause of the Symptom

INFOID:0000000001060031

cardiagn.com

1. Locate the area where noise occurs.
2. Confirm the type of noise.
3. Specify the operating condition of engine.
4. Check specified noise source.

If necessary, repair or replace these parts.

Location of noise	Type of noise	Operating condition of engine						Source of noise	Check item	Reference page
		Before warm-up	After warm-up	When starting	When idling	When racing	While driving			
Top of engine Rocker cover Cylinder head	Ticking or clicking	C	A	—	A	B	—	Tappet noise	Valve clearance	EM-262
Crankshaft pulley Cylinder block (Side of engine) Oil pan	Slap or rap	A	—	—	B	B	A	Piston slap noise	Piston ring end gap	EM-326
Front of engine Timing belt cover	Tapping or ticking	A	A	—	B	B	B	Timing belt tensioner noise	Timing belt tensioner operation	EM-287
Front of engine	Squeaking or fizzing	A	B	—	B	—	C	Drive belts (Sticking or slipping)	Drive belts deflection	EM-259
	Squall Creak	A	B	—	B	A	B	Water pump noise	Water pump operation	CO-60

A: Closely related B: Related C: Sometimes related —: Not related

cardiagn.com

PRECAUTION

PRECAUTIONS

Precaution for Drain Coolant

INFOID:0000000001060032

Drain coolant when engine is cooled.

Precaution for Disconnecting Fuel Piping

INFOID:0000000001060033

- Before starting work, make sure no fire or spark producing items are in the work area.
- Release fuel pressure before disassembly.
- After disconnecting pipes, plug openings to stop fuel leakage.

Precaution for Removal and Disassembly

INFOID:0000000001060034

- When instructed to use special service tools, use the specified tools. Always be careful to work safely, avoid forceful or uninstructed operations.
- Exercise maximum care to avoid damage to mating or sliding surfaces.
- Cover openings of engine system with tape or the equivalent, if necessary, to seal out foreign materials.
- Mark and arrange disassembly parts in an organized way for easy troubleshooting and re-assembly.
- When loosening nuts and bolts, as a basic rule, start with the one furthest outside, then the one diagonally opposite, and so on. If the order of loosening is specified, do exactly as specified.

Precaution for Inspection, Repair and Replacement

INFOID:0000000001060035

Before repairing or replacing, thoroughly inspect parts. Inspect new replacement parts in the same way, and replace if necessary.

Precaution for Assembly and Installation

INFOID:0000000001060036

- Use torque wrench to tighten bolts or nuts to specified value.
- When tightening nuts and bolts, as a basic rule, equally tighten in several different steps starting with the ones in center, then ones on inside and outside diagonally in this order. If the order of tightening is specified, do exactly same as specified.
- Replace with new gasket, packing, oil seal or O-ring.
- Thoroughly wash, clean, and air-blow each part. Carefully check oil or coolant passages for any restriction and blockage.
- Avoid damaging sliding or mating surfaces. Completely remove foreign materials such as cloth lint or dust. Before assemble, spread the oil on sliding surfaces well.
- Release air within route when refilling after draining coolant.
- Before starting engine, apply fuel pressure to fuel lines with turning ignition switch ON (with engine stopped). Then make sure that there are no leaks at fuel line connections.
- After repairing, start engine and increase engine speed to check coolant, fuel, oil, and exhaust systems for leakage.

Parts Requiring Angular Tightening

INFOID:0000000001060037

- Use an angle wrench for the final tightening of the following engine parts.
- Cylinder head bolts
- Lower cylinder block bolts
- Connecting rod cap bolts
- Crankshaft pulley bolt (No angle wrench is required as the bolt flange is provided with notches for angular tightening)
- Do not use a torque value for final tightening.
- The torque value for these parts are for a preliminary step.
- Ensure thread and seat surfaces are clean and coated with engine oil.

Precaution for Liquid Gasket

INFOID:0000000001060038

REMOVAL OF LIQUID GASKET

cardiagn.com

- After removing the mounting bolts and nuts, separate the mating surface using a seal cutter and remove the liquid gasket.
  CAUTION:
  Be careful not to damage the mating surfaces.
- In areas where the cutter is difficult to use, use a plastic hammer to lightly tap the liquid gasket applied area.
  CAUTION:
  If for some unavoidable reason a tool such as a flat-bladed screwdriver is used, be careful not to damage the mating surfaces.

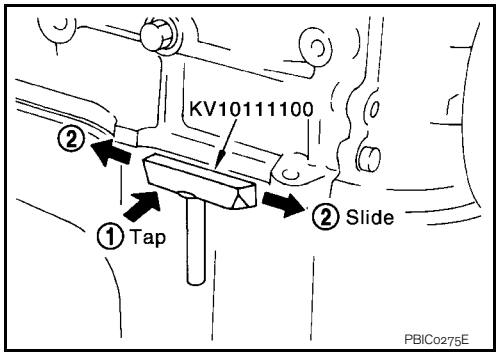

LIQUID GASKET APPLICATION PROCEDURE

1. Using a scraper, remove the old liquid gasket adhering to the gasket application surface and the mating surface.
   - Remove the liquid gasket completely from the groove of the gasket application surface, mounting bolts and bolt holes.
2. Wipe the gasket application surface and the mating surface with white gasoline (lighting and heating use) to remove adhering moisture, grease and foreign materials.
3. Attach the liquid gasket to the tube presser.
   Use Genuine Liquid Gasket or equivalent.

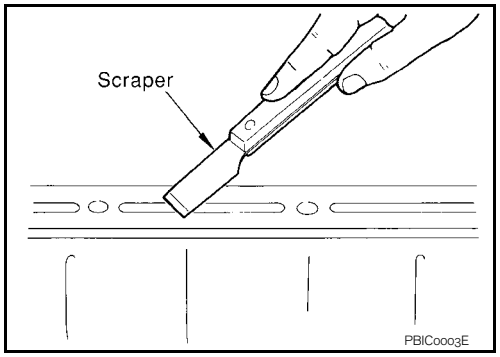

4. Apply the liquid gasket without breaks to the specified location with the specified dimensions.
   - If there is a groove for the liquid gasket application, apply the gasket to the groove.

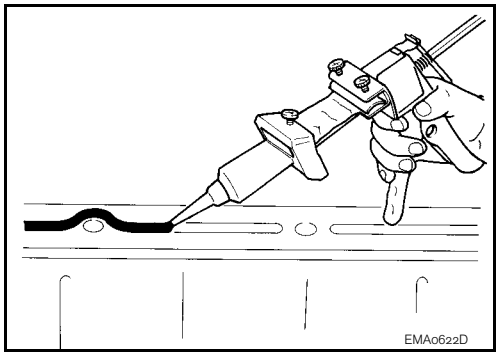

   - As for the bolt holes, normally apply the gasket inside the holes. If specified, it should be applied outside the holes. Make sure to read the instruction in this manual.
   - Within five minutes of gasket application, install the mating component.
   - If the liquid gasket protrudes, wipe it off immediately.
   - Do not retighten after the installation.
   - After 30 minutes or more have passed from the installation, fill the engine oil and coolant.
   CAUTION:
   If there are instructions in this manual, observe them.

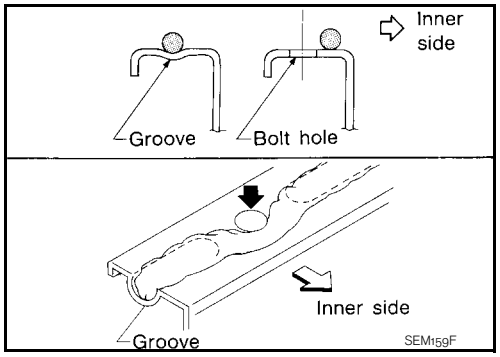

Precaution for Diesel Equipment

INFOID:0000000001060039

CLEANLINESS

CLEANLINESS INSTRUCTIONS WHICH MUST BE FOLLOWED WHEN WORKING ON THE HIGH PRESSURE DIRECT INJECTION SYSTEM

Risks relating to contamination

The system is very sensitive to contamination. The risks caused by the introduction of contamination are:
- Damage or destruction of the high pressure injection system and the engine,
- Seizing or leaking of a component.

cardiagn.com

All After-Sales operations must be performed under very clean conditions. This means that no impurities (particles a few microns in size) get into the system during dismantling or into the circuits via the fuel unions.
The cleanliness principle must be applied from the filter to the injectors.
WHAT ARE THE SOURCES OF CONTAMINATION?

Contamination is caused by:
- Metal or plastic chips,
- Paint,
- Fibres:
- Boxes,
- Brushes,
- Paper,
- Clothing,
- Cloths,
- Foreign bodies such as hair,
- Ambient air,
- Etc.

IMPORTANT: It is not possible to clean the engine using a high pressure washer because of the risk of damaging connections. In addition, moisture may collect in the connectors and create electrical connection malfunctions.

INSTRUCTIONS TO BE FOLLOWED BEFORE ANY WORK IS CARRIED OUT ON THE INJECTION SYSTEM
- Ensure that you have the plugs for the unions to be opened (bag of plugs sold at the Parts Stores - Nissan part No.: 16609 00Q0B, Renault part No.: 77 01 476 857). Plugs are to be used once only. After use, they must be thrown away (once used they are soiled and cleaning is not sufficient to make them reusable). Unused plugs must be thrown away.
- Ensure that you have hermetically resealable plastic bags for storing removed parts. Stored parts will therefore be less subject to the risk of impurities. The bags must be used only once, and after use they must be thrown away.
- Lint-free towelettes to be used for high pressure supply pump related service purpose. The use of a normal cloth or paper for cleaning purposes is forbidden. These are not lint-free and may contaminate the fuel circuit of the system. Each lint-free cloth should only be used once.

INSTRUCTIONS TO BE FOLLOWED BEFORE OPENING THE FUEL CIRCUIT
- For each operation, use new thinner (used thinner contains impurities). Pour it into a clean receptacle.
- For each operation, use a clean brush which is in good condition (the brush must not shed its bristles).
- Use a brush and thinners to clean the connections to be opened.
- Blow compressed air over the cleaned parts (tools, cleaned the same way as the parts, connections and injection system zone). Check that no bristles remain adhered.
- Wash your hands before and during the operation if necessary.
- When wearing leather protective gloves, cover these with latex gloves.

INSTRUCTIONS TO BE FOLLOWED DURING THE OPERATION
- As soon as the circuit is open, all openings must be plugged to prevent impurities from entering the system. The plugs to be used are available from the Parts Stores - Nissan part No.: 16609 00Q0B, Renault part No.: 77 01 476 857. They must not, under any circumstances, be reused.
- Close the hermetically sealed bag, even if it has to be reopened shortly afterwards. Ambient air carries contamination.
- All components of the injection system that are removed must be stored in a hermetically sealed plastic bag once the plugs have been inserted.
- The use of a brush, thinner, bellows, sponge or normal cloth is strictly forbidden once the circuit has been opened. These items are likely to allow impurities to enter the system.
- A new component replacing an old one must not be removed from its packaging until it is to be fitted to the vehicle.

Instructions for Fitting the Plugs
Nissan part number: 16609 00Q0B

cardiagn.com

(Renault part number: 77 01 476 857)

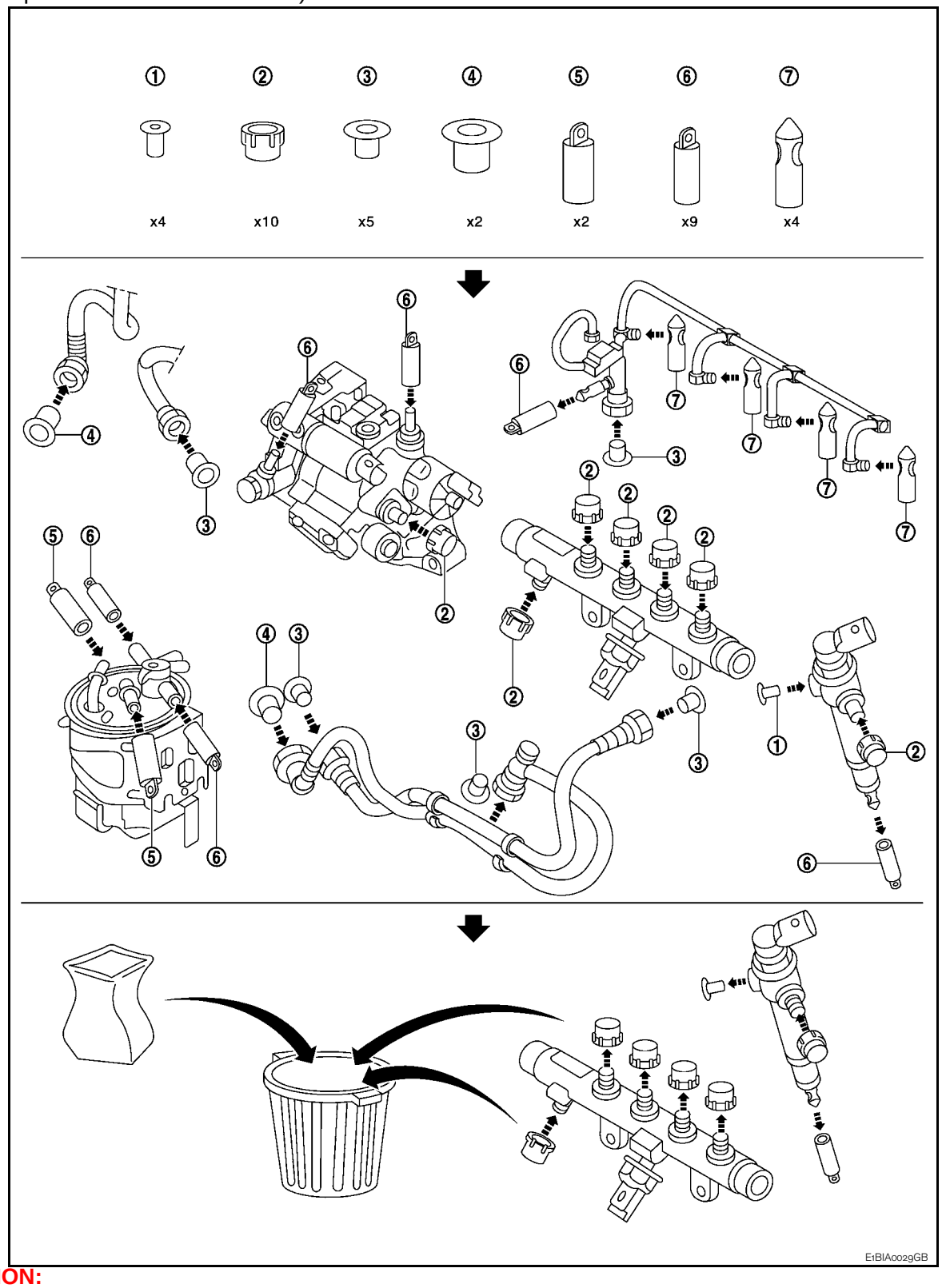

CAUTION:

- **The engine must not run with:**
- **Diesel containing more than 10% diester**
- **Petrol, even in very small amounts.**
- **The system can inject the diesel into the engine at a pressure of up to 140,000 kPa (1,400 bar, 1,428 kg/cm^2, 20,300 psi). Before carrying out any work, check that the injector rail is no longer pressurized and that the fuel temperature is not too high.**
- **You must respect the cleaning and safety advice specified in this document for any work on the high pressure injection system.**

cardiagn.com

SPECIAL FEATURES

CAUTION:

- **The engine must not operate with:**
- **Diesel engine fuel containing more than 10% diester,**
- **Petrol, even in tiny quantities.**
- **The system can inject the diesel into the engine at a pressure up to 1400 bars. Before carrying out any work, check that the injector rail is not under pressure and that the fuel temperature is not too high.**
- **You must respect the cleaning and safety advice specified in this document for any work on the high pressure injection system.**
- **Removal of the interior of the pump and injectors is prohibited. Only the flow actuator, the fuel temperature sensor and the venturi can be replaced.**
- **For safety reasons, it is strictly forbidden to slacken a injection tube union when the engine is running.**
- **It is not possible to remove the pressure sensor from the fuel rail because this may cause circuit contamination malfunctions. If the pressure sensor fails, the pressure sensor, the rail and the five injection tubes must be replaced.**
- **It is strictly forbidden to remove any high pressure supply pump pulley marked number 070 575. If the pump is being replaced, the pulley must be replaced.**
- **It is forbidden to repair the wiring connecting the knock sensor (accelerometer) and the CKP sensor (engine speed sensor). If the wiring should fail, it has to be replaced with new wiring.**
- **Applying 12 volts directly to any component in the system is prohibited.**
- **Ultrasonic carbon removal and cleaning are prohibited.**
- **Never start the engine without the battery being connected correctly.**
- **It is essential to replace all the disconnected air inlet plastic pipes.**

INSTRUCTIONS FOR INJECTION TUBES

CAUTION:

All the injection tube removed must be systematically replaced along with the clips.

TIGHTENING THE INJECTION TUBES

NOTE:

fit the pump/rail pipe before the rail/injector pipes.

Rail-pump pipe

- Undo the rail,
- Grease the threads of the injection tube nuts,
- Insert the injection tube olive into the taper of the high pressure pump outlet,
- Insert the injection tube olive into the taper of the high pressure rail inlet.
- Move the nut into position by hand, on the rail side then the pump side,
- Tighten the rail,
- Tighten the injection tube nuts on the rail side then on the pump side.

Rail/injector pipes

- Undo the rail,
- Grease the threads of the injection tube nuts,
- Insert the injection tube olive into the taper of the high pressure injector inlet,
- Insert the injection tube olive into the taper of the high pressure rail outlet,
- Move the nuts into position by hand, on the injector side then the rail side,
- Tighten the rail,
- Ensure that the new clip, supplied with the new injection tube, is fitted,
- Tighten the nuts of the injection tubes on the injector side first and then on the fuel rail side.

NOTE:

Before fitting a new injection tube, move back the nuts on the pipe then lightly lubricate the nut threads with the oil from the sachet provided in the parts kit.

CHECKING SEALING AFTER REPAIR

CAUTION:

After any operation, check that there are no diesel leaks.

- Reprime the circuit using the priming pump.
- Start the engine and allow to warm up at idle speed, visually inspecting for any fuel leaks.
- Apply tracing fluid around the high pressure connections of the pipe that has been replaced.
- Once the engine coolant temperature is above **50°C** and provided there are no malfunctions present, carry out a road test, taking the engine speed up to **4000 rpm** at least once to check that there are no leaks.
- Perform a visual inspection after the road test to make sure that there are no high pressure leaks.
- Clean off the tracing fluid.

cardiagn.com

Installation of Thread Inserts

INFOID:0000000001066552

Threaded holes on all engine component parts can be repaired by using thread inserts.

cardiagn.com

PREPARATION

PREPARATION

Special Service Tools

INFOID:0000000001060040

NISSAN tool number (RENAULT tool No.) Tool name	Description
EM03470000 (—) Piston ring compressor 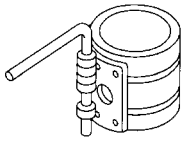 NT044	Installing piston assembly into cylinder bore
KV10111100 (—) Seal cutter 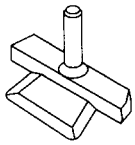 NT046	Removing oil pan
KV10112100 (—) Angle wrench 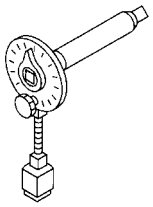 NT014	Tightening bolts for bearing cap, cylinder head, etc. in angle
KV113B0020 (Emb. 880) Sliding hammer 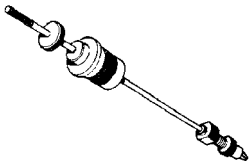 MBIB0358E	Inertia extractor
KV113B0060 (Mot. 582-01) Ring gear stopper 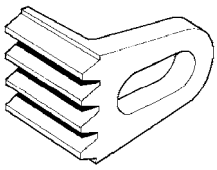 MBIB0363E	Flywheel immobilizing tool.
KV113B0110 (Mot. 1430) TDC set pin	Set of TDC pins

cardiagn.com

NISSAN tool number (RENAULT tool No.) Tool name	Description
KV113B0120 (Mot. 1485-01) Oil jet remover MBIB0372E	Tool for removing the piston bottom oil jets
KV113B0130 (Mot. 1489) TDC set pin 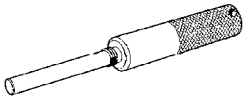 MBIB0373E	TDC setting pin
KV113B0140 (Mot. 1492) Bearing assembling set 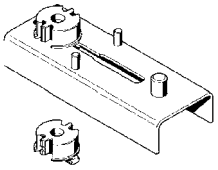 MBIB0374E	Tool for installing connecting rod bearing
KV113B0150 (Mot. 1492-03) Bearing assembling adapter 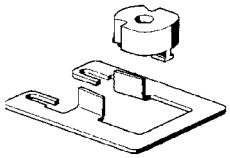 MBIB0375E	Adaptation kit for installing the detachable cap connecting rod bearing
KV113B0160 (Mot. 1493-01) Bearing insert 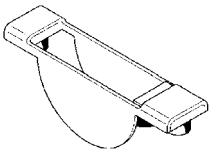 MBIB0376E	Tool for installing main bearing
KV113B0170 (Mot. 1494) Oil jet remover plate	Tool for removing oil jets
KV113B0190 (Mot. 1567) Clip pliers	Pliers for exhaust gas recycling pipe clips
KV113B0210 (Mot. 1585) Front oil seal drift 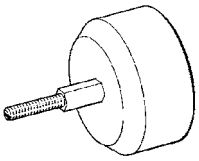 MBIB0381E	Tool for installing crankshaft seals, flywheel end

cardiagn.com

NISSAN tool number (RENAULT tool No.) Tool name	Description
KV113B0220 (Mot. 1586) Front oil seal drift set	Tool for installing crankshaft seals, timing end
KV113B0230 (Mot. 1632) Camshaft seal insert	Tool for installing inlet camshaft seals
KV113B0240 (Rou. 15-01) Shaft protector	Internal shaft protector **16 mm (0.63 in) dia.**
KV113B0400 (Mot. 1592) Compression gauge attachment 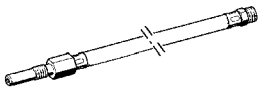 MBIB0712E	Connecting compression gauge and glow plug holex
— (Mot. 1606-A) Camshaft pulley holder 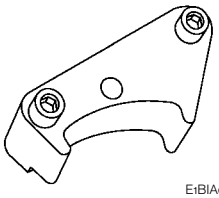 E1BIA0053ZZ	Tool for locking sprockets for toothed timing belt
— (Mot. 1638) Belt tension gauge 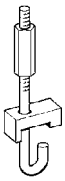 MBIB0382E	Setting drive belt tension

Commercial Service Tools

INFOID:0000000001060041

NISSAN tool number (RENAULT tool No.) Tool name	Description
KV113B0030 (Mot. 11) Crankshaft bearing remover 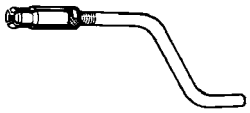 MBIB0359E	Crankshaft bearing extractor
KV113B0040 (Mot. 251-01) Dial gauge stand set 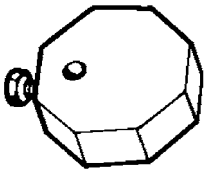 MBIB0360E	Gauge stand used with KV113B0050 (Mot. 252-01)

cardiagn.com

NISSAN tool number (RENAULT tool No.) Tool name	Description
KV113B0050 (Mot. 252-01) Dial gauge stand set 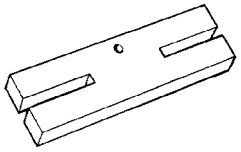 MBIB0361E	Thrust plate for measuring the protrusion of cylinder liners used with KV113B0040 (Mot. 251-01).
KV113B0090 (Mot. 1335) Valve seal remover 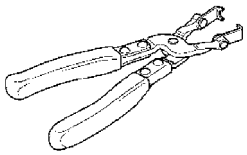 MBIB0370E	Tool for removing valve stem seals
KV113B0180 (Mot. 1511-01) Valve seal drift 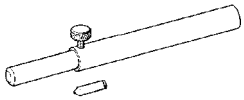 MBIB0378E	Tool for installing valve stem seals
KV113B0200 (Mot. 1573) Cylinder head stand 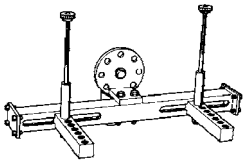 MBIB0380E	Cylinder head support
KV113E0010 (Mot. 1566) Fuel spill tube spanner MBIB0379E	Spanner for installing and removing injection tubes
WS39930000 (—) Tube presser 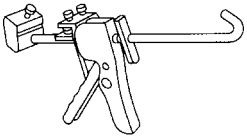 NT052	Pressing the tube of liquid gasket
Manual lift table caddy 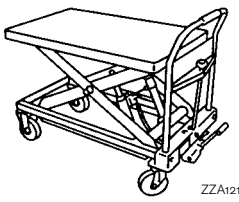 ZZA1210D	Removing and installing engine

cardiagn.com

NISSAN tool number (RENAULT tool No.) Tool name	Description
Piston ring expander 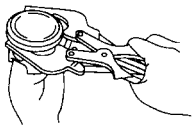 NT030	Removing and installing piston ring
(Mot. 588) 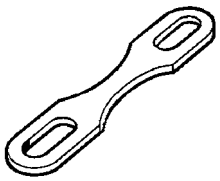 MBIB0364E	Liner retaining strap
(664000) Cylinder head test container 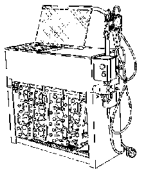 MBIB0383E	Tool for testing the cylinder head, including: a tray and the various kits suited for each model of cylinder head (plug, sealing plate, blanking plate).
Torx socket	Standard 1/2" (12.7 mm) square drive 8/12 /14 female torx socket.
(Mot. 1505) (Mot. 1715) Frequency meter MBIB1423E	Tool for belt tension checking with frequency
Glow plug wrench MBIB0387E	Articulated wrench for removing and installing the glow plugs
Main bearing wrench 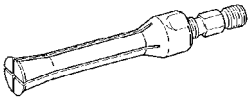 MBIB0388E	Wrench for removing main bearings

cardiagn.com

ON-VEHICLE MAINTENANCE

DRIVE BELTS

Exploded View

INFOID:0000000001060043

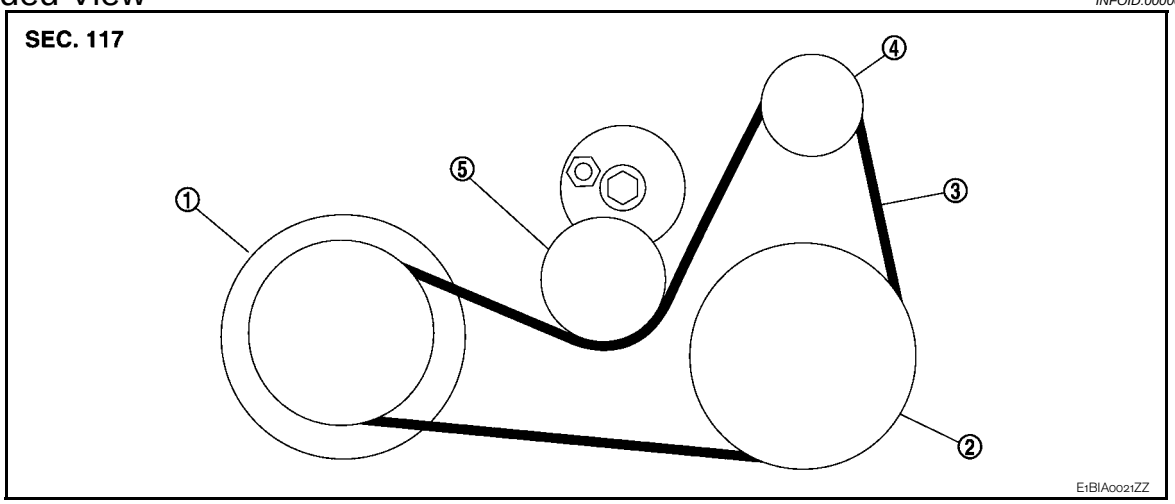

1. Crankshaft pulley
2. A/C compressor
3. Drive belt
4. Alternator
5. Drive belt auto-tensioner

Inspection and Adjustment

INFOID:0000000001060045

INSPECTION

WARNING:
Be sure to perform when the engine is stopped.

1. Inspect belts for cracks, fraying, wear and oil. If necessary, replace.
2. Evaluate manually if the belt is enough tensioned (tension cannot be measured by way of frequency meter).
3. When drive belt is considered as not enough tensioned, replace it.
   CAUTION:
   Auto-tensioner must be replaced with a new one when the belt is replaced.

ADJUSTMENT

Refer to EM-329, "Drive Belt".

Belt tensioning is not necessary, as it is automatically adjusted by auto-tensioner.

Removal and Installation

INFOID:0000000001082854

CAUTION:
- **Replace any belt that has been removed with a new one.**
- **Auto-tensioner must be replaced with new ones when the belt is replaced.**
- **Do not run the engine without the drive belts to avoid damaging the crankshaft pulley.**

REMOVAL

1. Remove engine undercover.
2. Remove RH front wheel.
3. Remove right side splash cover.

cardiagn.com

4. Remove drive belt.
   - Turn clockwise adjusting bolt.

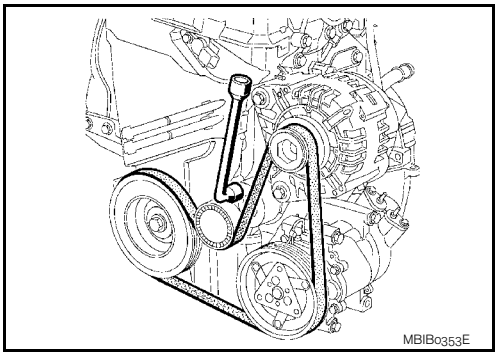

INSTALLATION

1. Install the drive belt.
   CAUTION:
   - **Make sure belt is correctly engaged with the pulley groove.**
   - **Check for oil and coolant on belt and each pulley groove.**
   - **Certain drive belts have five teeth whereas the air conditioning compressor pulley, power-assisted steering pump pulley, and alternator pulley all have six teeth.In this case, it is essential to check that inner tooth (O) of the pulleys remains free when fitting the drive belt.**
     Never turn the engine in the opposite direction to its normal operating direction.
     Use a brush to remove any deposits from the crankshaft pulley V grooves.
     For engines fitted with a mechanical tensioning roller, it is essential to replace the tensioning roller mounting bolts.

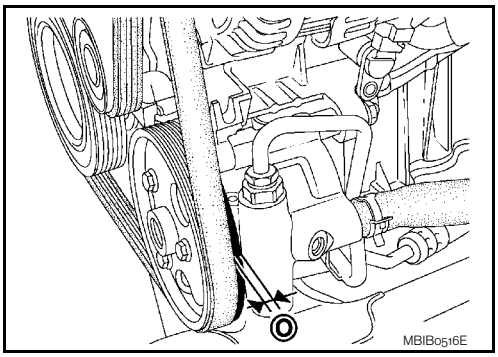

2. Release drive belt auto-tensioner, and apply tension to drive belt.
3. Turn crankshaft pulley clockwise several times to equalize tension between each pulley.

cardiagn.com

AIR CLEANER FILTER

Removal and Installation

INFOID:0000000001060047

REMOVAL

1. Open air cleaner case.

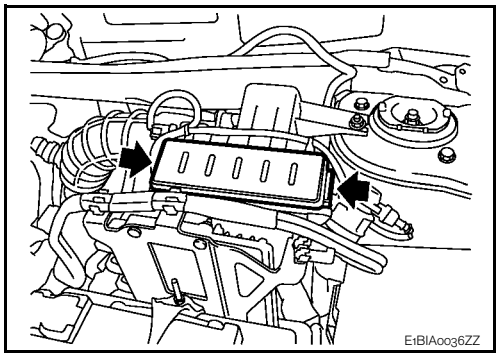

2. Remove air cleaner filter (1).

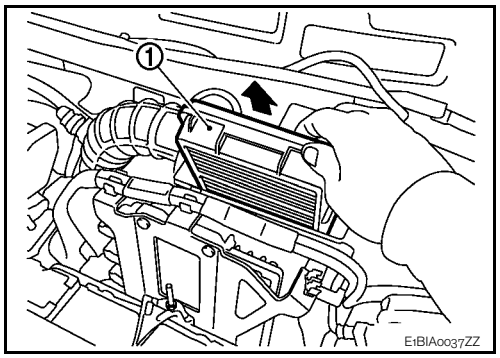

INSTALLATION

Install in the reverse order of removal.

cardiagn.com

CAMSHAFT VALVE CLEARANCE

Inspection and Adjustment

INFOID:0000000001060050

INSPECTION

1. Place the valves of the cylinder concerned at the “end of exhaust - beginning of intake” position and inspect the clearance (X).
   NOTE:
   Dimension (Y) corresponds to the tappet thickness sizes (there are 25 sizes at the service parts).
2. Compare the values recorded with the values specified, then replace the tappets which are not within tolerance.

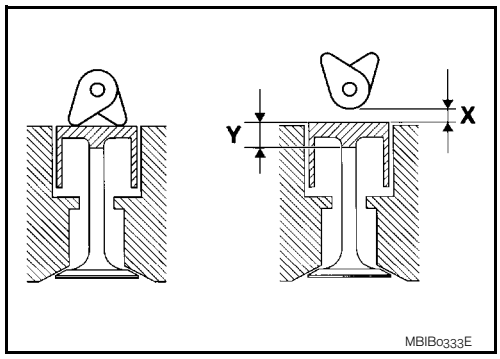

Clearance, when the engine is cold:

Refer to EM-329, "Camshaft".

ADJUSTMENT

1. The camshaft must be removed to replace the tappets.
   Determining dimension (Y).
2. Set up the following assembly using dial gauge stand [KV113B0050 (Mot. 252-01) (commercial service tool) or equivalent tool] and dial gauge, then calibrate the gauge.

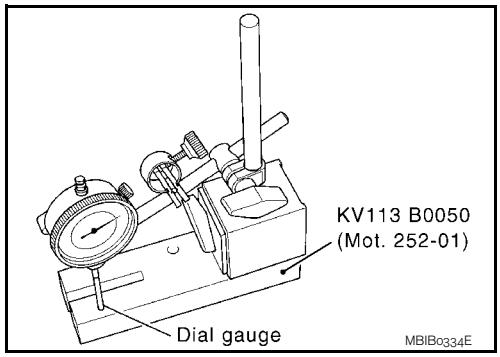

3. Raise the gauge extension (without modifying the position of the magnetic support/gauge assembly), then slide in the tappet to be measured.
   Note dimension (Y) and repeat the operation for the tappets where the valve clearance is not within tolerance.
   Select the various thicknesses of the tappet(s). The service parts supplies 25 sizes of single-piece tappets. Refer to EM-329, "Camshaft".

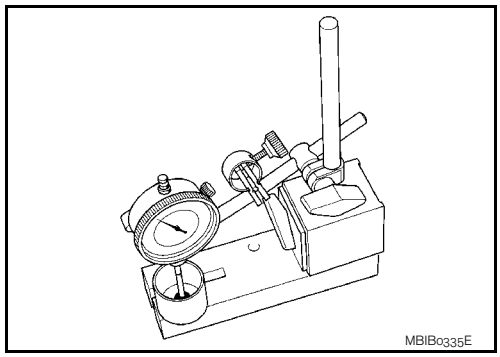

cardiagn.com

COMPRESSION PRESSURE

Inspection

INFOID:0000000001060143

1. Warm up engine thoroughly. Then stop.
2. Remove glow plug.
3. Disconnect high-pressure supply pump harness connector to avoid fuel injection during measurement.
4. Connect compression gauge attachment hose [SST: KV113B0400 (Mot. 1592)] (A) to the hole for glow plug.
5. Connect compression gauge (B) to attachment hose.
6. Turn ignition switch to START for cranking and check compression gauge.

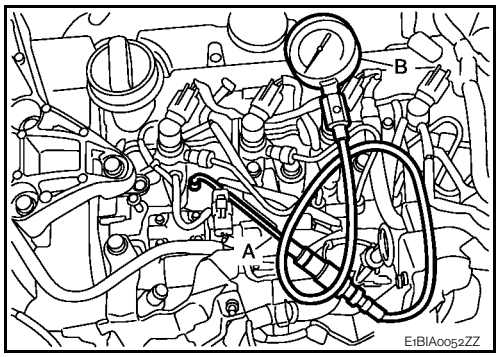

Compression pressure

: Refer to EM-329, "General Specification".

7. Perform the same procedure for the other cylinders.
   - If compression pressure is below minimum value, check valve clearances and parts associated with combustion chamber (valve, valve seat, piston, piston ring, cylinder bore, cylinder head, cylinder head gasket). After the checking, measure compression pressure again.
   - If some cylinder has low compression pressure, pour small amount of engine oil into the glow plug hole of the cylinder to re-check it for compression.
   - If the added engine oil improves the compression, piston rings may be worn out or damaged. Check piston rings and replace if necessary.
   - If the compression pressure remains at low level despite the addition of engine oil, valves may be malfunctioning. Check valves for damage. Replace valve or valve seat accordingly.
   - If two adjacent cylinders have respectively low compression pressure and their compression remain slow even after the addition of engine oil, cylinder head gaskets are leaking. In such a case, replace cylinder head gaskets.
8. Disconnect compression gauge and attachment hose.
9. After inspection is completed, install removed parts.
10. Start the engine, and make sure that the engine runs smoothly.
11. Perform trouble diagnosis. If DTC appears, erase it. Refer to EC-1315, "Diagnosis Description".

cardiagn.com

ON-VEHICLE REPAIR

DRIVE BELT AUTO-TENSIONER

Exploded View

INFOID:0000000001060172

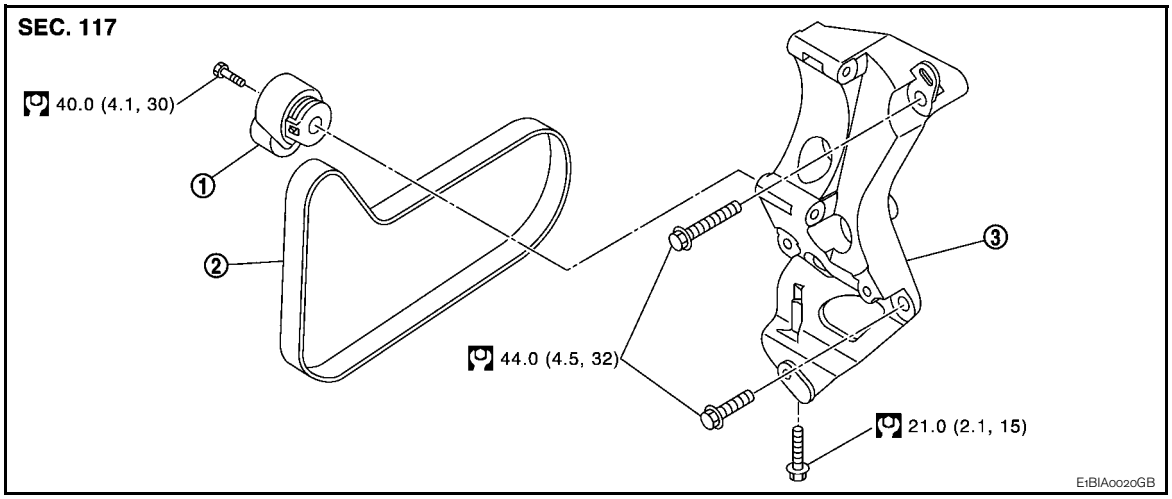

1. Drive belt auto-tensioner
2. Drive belt
3. Multifunction bracket

Refer to GI-4, "Components" for symbols in the figure.

Removal and Installation

INFOID:0000000001060044

CAUTION:
- **Replace any belt that has been removed with a new one.**
- **Auto-tensioner must be replaced with new ones when the belt is replaced.**
- **Do not run the engine without the drive belts to avoid damaging the crankshaft pulley.**

REMOVAL

1. Remove engine undercover.
2. Remove RH front wheel.
3. Remove right side splash cover.
4. Remove drive belt. Refer to EM-259, "Removal and Installation".
5. Remove auto-tensioner.

INSTALLATION

1. Install auto-tensioner mounting bolt.

   40.0 N·m (4.1 kg-m, 30 ft-lb)

   Align the notch and tighten mounting bolt.
2. Install the drive belt. Refer to EM-259, "Removal and Installation".
3. Release drive belt auto-tensioner, and apply tension to drive belt.
4. Turn crankshaft pulley clockwise several times to equalize tension between each pulley.

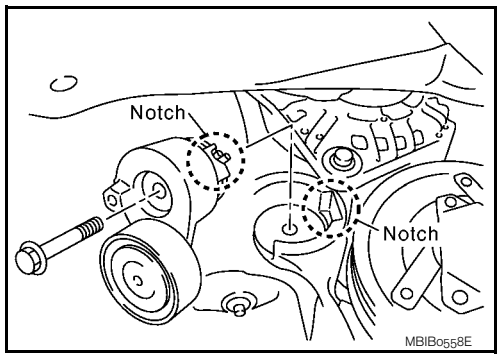

cardiagn.com

AIR CLEANER AND AIR DUCT

Exploded View

INFOID:0000000001060175

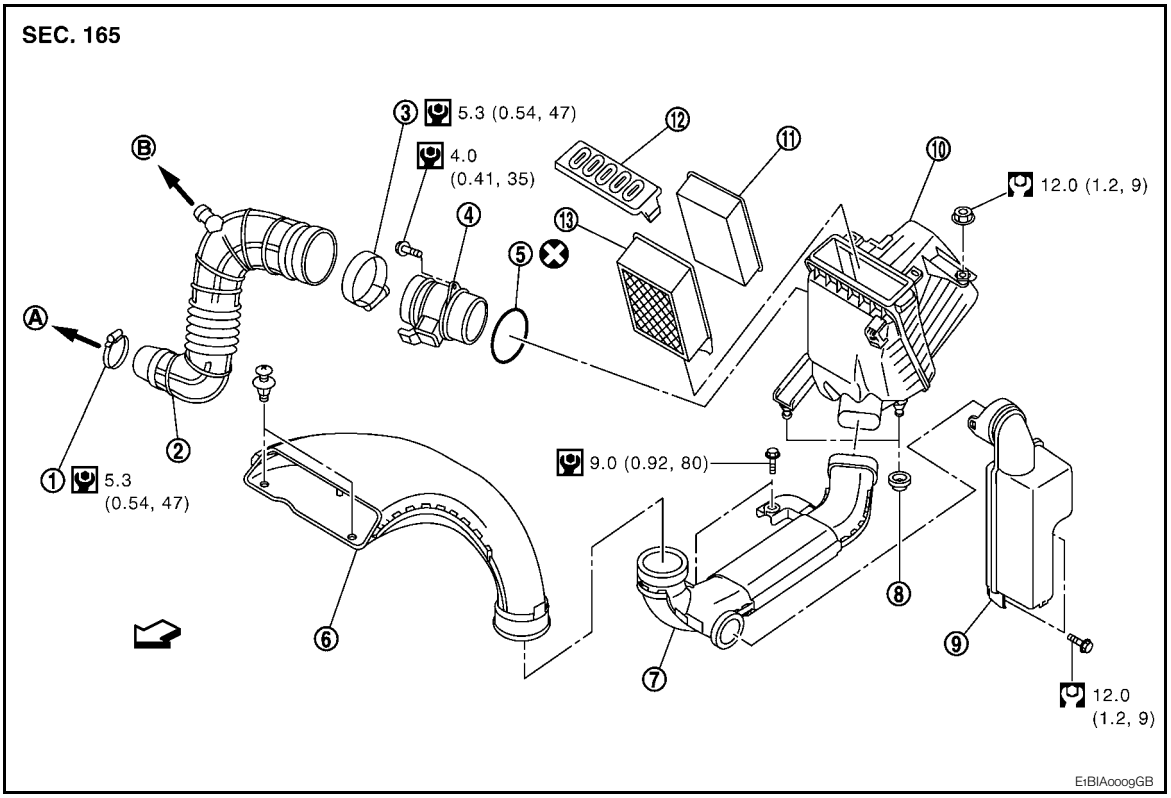

1. Clamp	2. Air duct	3. Clamp
4. Mass air flow sensor	5. O-ring	6. Air duct
7. Air duct	8. Grommet	9. Resonator
10. Air cleaner case	11. Air cleaner filter	12. Cover
13. Holder		
A. To turbocharger	B. To blow-by hose	

Refer to GI-4, "Components" for symbols in the figure.

Removal and Installation

INFOID:0000000001060176

REMOVAL

1. Disconnect battery ground cable.
2. Disconnect battery positive cable.
3. Remove engine room cover. Refer to EM-266, "Removal and Installation".
4. Disconnect blow-by hose.
5. Remove air duct (suction) mounting clip and remove air duct (suction).
6. Remove battery.
7. Disconnect ECM harness connectors and remove ECM and ECM bracket.
8. Remove air duct (inlet) by loosing clamp clip.
9. Remove air cleaner case by sliding the air cleaner case upward.
   CAUTION:
   Slide the air cleaner case carefully so as not to damage it on the air cleaner case and harness bracket.

INSTALLATION

- Install in the reverse order of removal.

cardiagn.com

CHARGE AIR COOLER

Exploded View

INFOID:0000000001060209

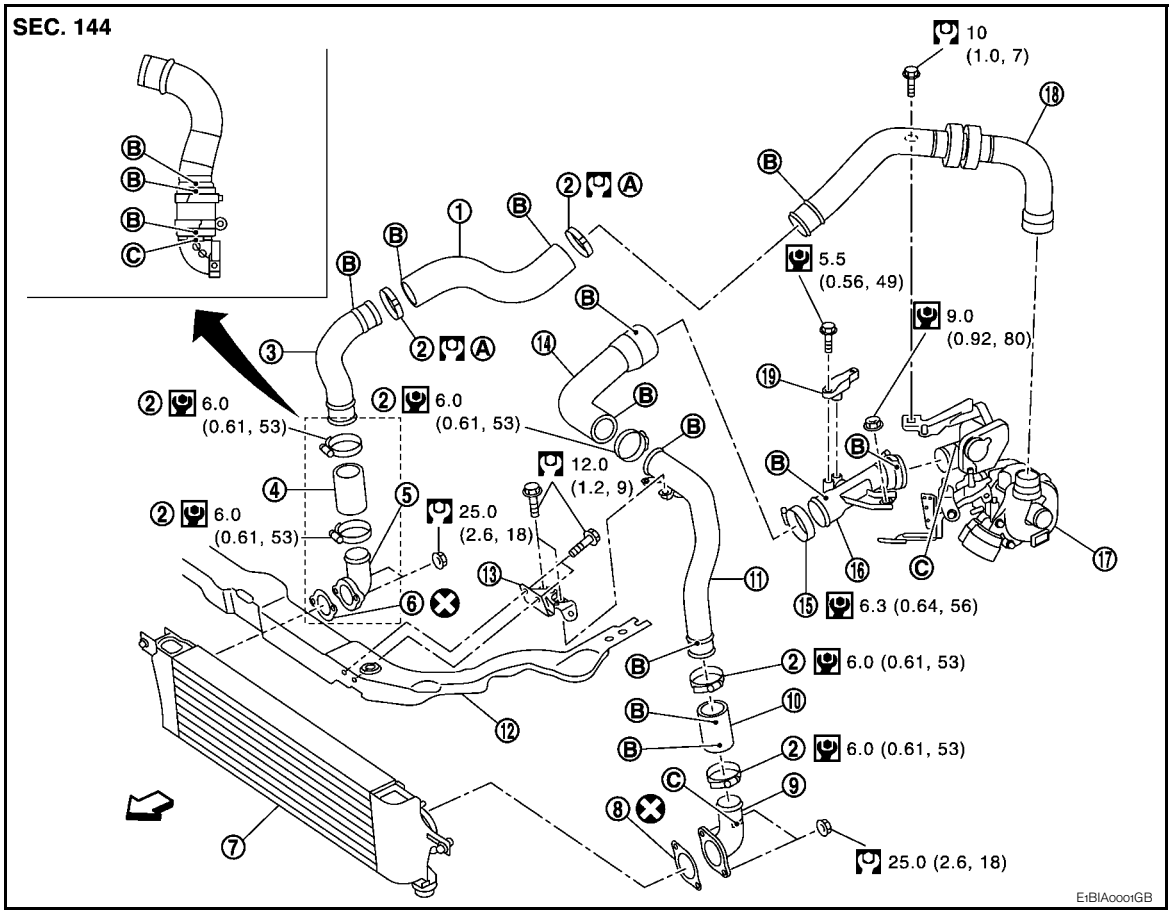

1. Air inlet hose	2. Clamp	3. Air inlet tube
4. Air inlet hose	5. Air inlet tube	6. Gasket
7. Charge air cooler	8. Gasket	9. Air inlet tube
10. Air inlet hose	11. Air inlet tube	12. Radiator core support
13 Bracket	14. Air inlet hose	15. Clamp
16. Air inlet tube	17. Turbocharger	18. Air inlet tube
19 Turbocharger boost sensor		

⇦ : Vehicle front

A. 1st step: 5.0 N·m (0.51 kg-m, 44 ft-lb) 2nd step: 7.0 N·m (0.71 kg-m, 62 ft-lb)	B. Paint mark	C. Rib to be aligned with paint mark

Refer to GI-4, "Components" for symbols in the figure.

Removal and Installation

INFOID:0000000001060214

REMOVAL

cardiagn.com

1. Remove engine cover (1).
2. Remove air inlet hoses and tubes.
3. Remove radiator undercover. Refer to EXT-11, "Exploded View".

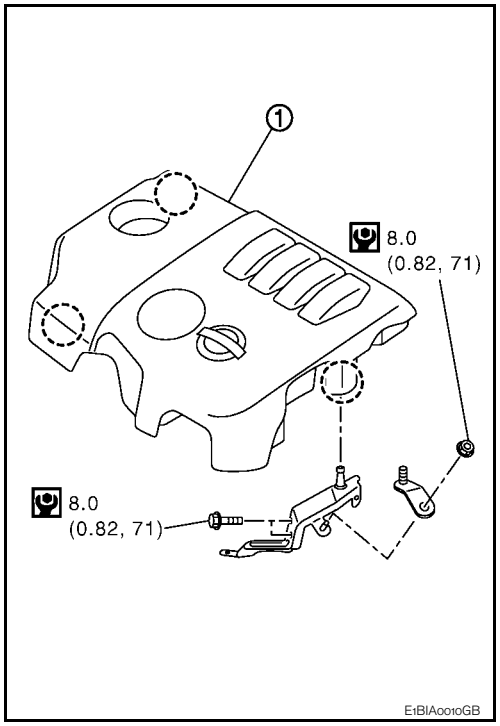

4. Remove charge air cooler (1) from underbody.

CAUTION:
- **Avoid interference between the charge air cooler and condenser.**
- **When removing charge air cooler, close opening on turbo charger and throttle with shop cloth or other suitable material.**

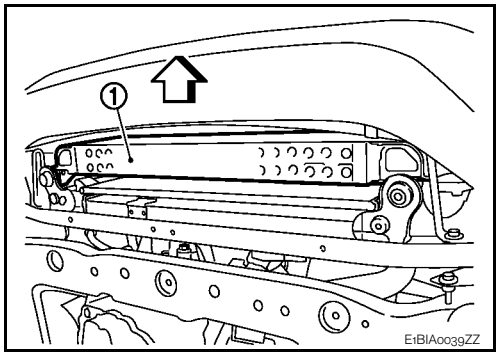

INSTALLATION

Install in the reverse order of removal paying attention to the following points:
- Apply a neutral detergent (fluid) to the joint between hoses and pipes (oil is not permissible).
- Pay attention to identification mark and direction.
- When installing air inlet hoses and tubes. Refer to “Removal and Installation (For 65kW)”.

Inspection

INFOID:0000000001060391

INSPECTION AFTER REMOVAL

1. Check that the charge air cooler is not full of oil. In that case, clean it with cleaning agent and then let it dry.
2. Check air passages of charge air cooler core and fins for clogging, leaks or deformation. Clean or replace charge air cooler in necessary.
   - Be careful not to deform core fins.
   - For cleaning procedure of charge air cooler core, refer to CO-55, "RADIATOR : Inspection".

cardiagn.com

EGR SYSTEM

Exploded View

INFOID:0000000001060215

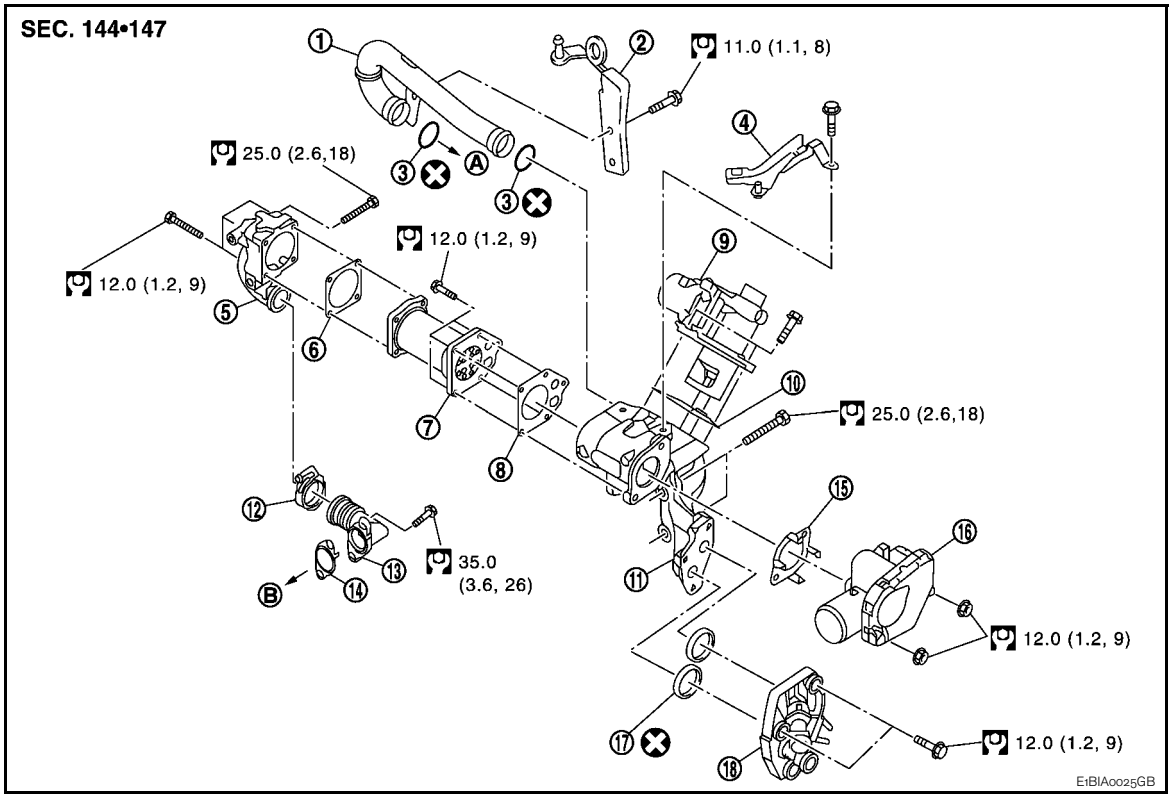

1.	Air inlet tube	2.	Engine slinger	3.	O-ring
4.	Bracket	5.	EGR tube	6.	Gasket
7.	EGR cooler	8.	Gasket	9.	EGR volume control valve
10.	Gasket	11.	EGR volume control valve housing	12.	Clamp
13.	EGR tube	14.	Gasket	15.	Gasket
16.	Electric throttle control actuator	17.	O-ring	18.	EGR cooler cover
A.	To intake manifold	B.	To exhaust manifold		

Refer to GI-4, "Components" for symbols in the figure.

Removal and Installation

INFOID:0000000001060420

REMOVAL

1. Remove battery ground cable.
2. Remove engine cover. Refer to EM-266, "Removal and Installation".
3. Remove air cleaner case and air duct (inlet). Refer to EM-265, "Removal and Installation".
4. Remove bulk head cover.
5. Disconnect EGR volume control valve connector.
6. Remove mounting bolts.
7. Drain engine coolant and disconnect water hose.
8. Loosen turbocharger inlet tube.
9. Remove front engine slinger..
10. Remove air inlet tube.
11. Remove electric throttle control actuator.
12. Remove EGR tube mounting bolts.

cardiagn.com

13. Remove EGR assembly.

INSTALLATION

Install in the reverse order of removal.

cardiagn.com

CATALYST

Exploded View

INFOID:0000000001060261

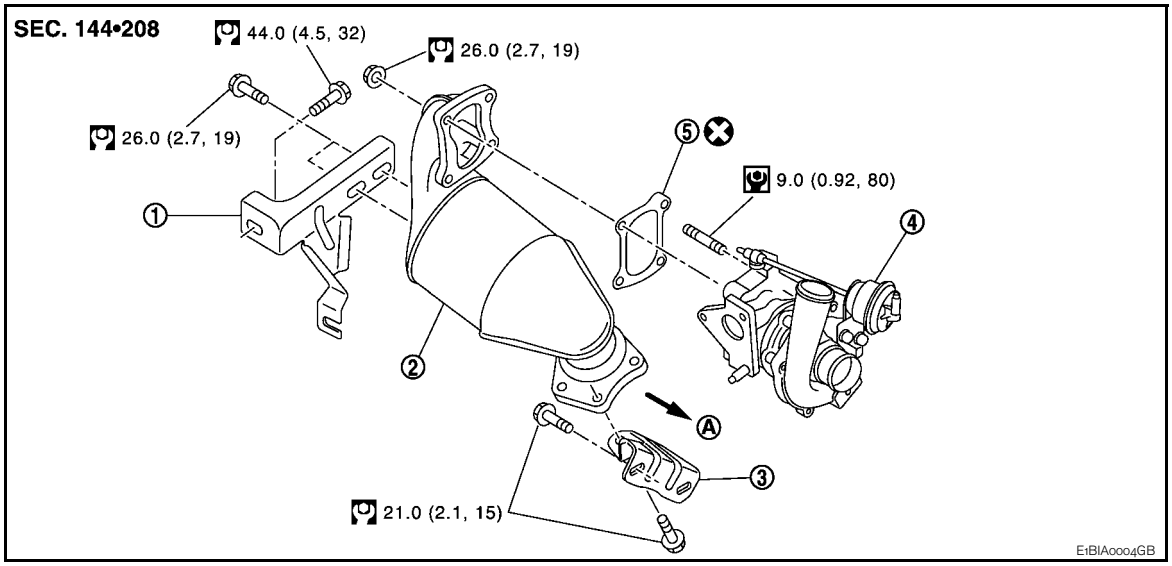

1. Bracket
2. Catalyst
3. Bracket
4. Turbocharger
5. Gasket

A. To exhaust front tube

Refer to GI-4, "Components" for symbols in the figure.

Removal and Installation

INFOID:0000000001060429

REMOVAL

1. Remove battery ground cable.
2. Remove engine undercover.
3. Remove exhaust front tube. Refer to EX-15, "Removal and Installation".
4. Remove catalyst mounting bolts and brackets.
5. Remove catalyst.

INSTALLATION

Install in reverse order of removal.

Inspection

INFOID:0000000001060430

INSPECTION AFTER INSTALLATION

Start engine and raise engine speed to check no exhaust emission leaks.

cardiagn.com

TURBOCHARGER

Exploded View

INFOID:0000000001060244

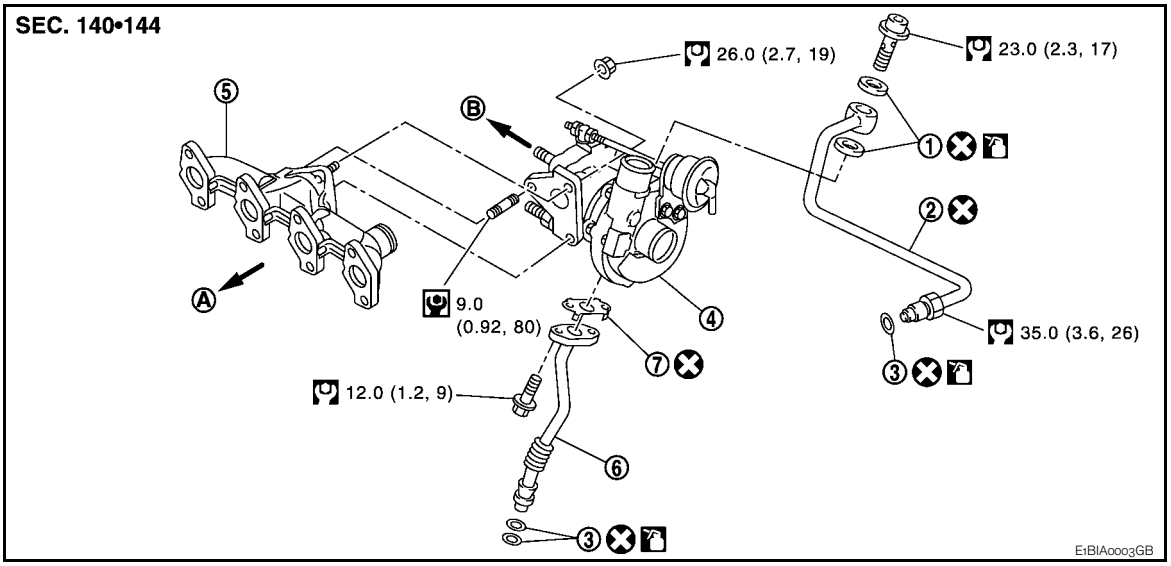

1.	Washer	2.	Turbocharger oil supply tube	3.	O-ring
4.	Turbocharger	5.	Exhaust manifold	6.	Turbocharger oil outlet tube
7.	Gasket				
A.	To cylinder head	B.	To catalyst		

Refer to GI-4, "Components" for symbols in the figure.

Removal and Installation

INFOID:0000000001060245

REMOVAL

1. Remove exhaust front tube. Refer to EX-15, "Exploded View".
2. Remove catalyst. Refer to EM-270, "Removal and Installation".
3. Remove engine cover.
4. Remove air inlet tube and air duct connected to turbocharger.
5. Remove oil tubes.
   NOTE:
   After applying penetrative lubricant to the mounting nuts, check for the penetration of the lubricant, and then loosen the nuts to remove.
6. Remove turbocharger from exhaust manifold.
   CAUTION:
   Do not disassemble or adjust the turbocharger body.

INSTALLTION

Install in the reverse order of removal.

NOTE:

Apply engine oil to lubricate the turbocharger oil tubes.

Inspection

INFOID:0000000001060259

cardiagn.com

INSPECTION AFTER REMOVAL

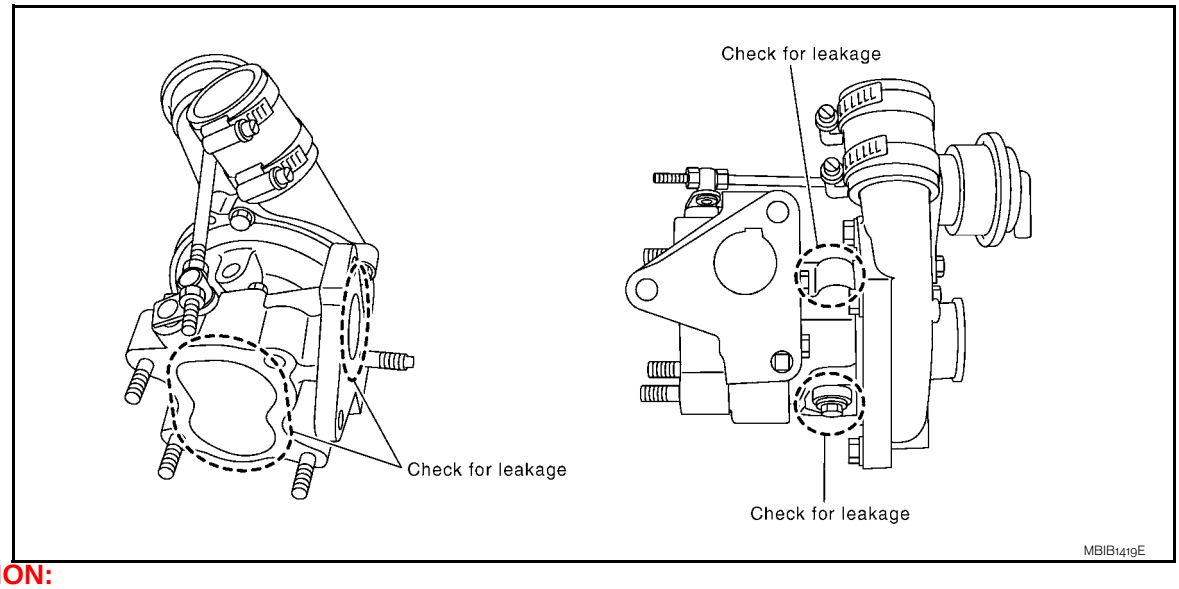

CAUTION:

When the compressor wheel turbine wheel or rotor shaft is damaged, remove all the fragments and foreign matter left in the following passages in order to prevent a secondary failure:

Suction side : Between turbocharger and air cleaner

Exhaust side : Between turbocharger and catalyst

cardiagn.com

EXHAUST MANIFOLD

Exploded View

INFOID:0000000001060436

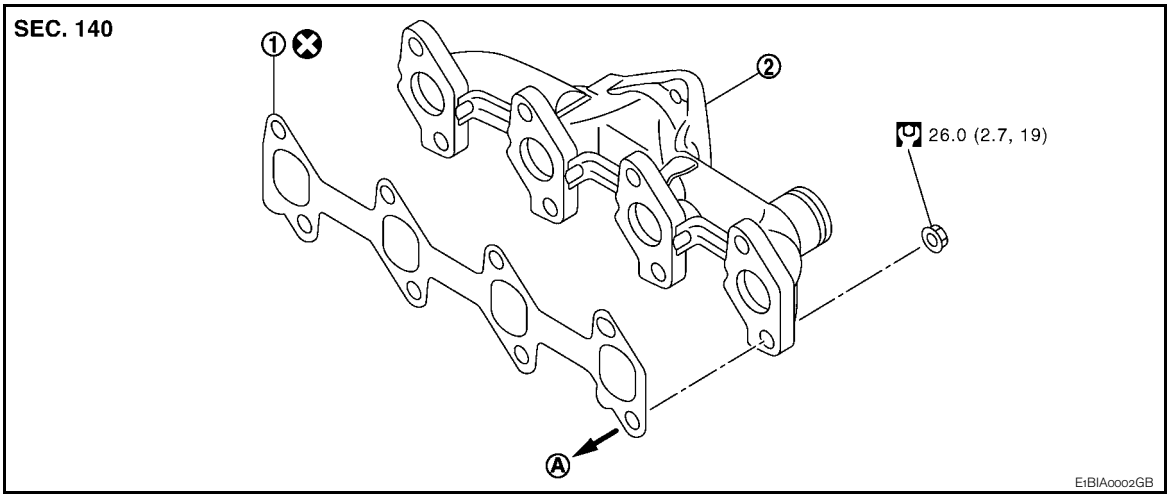

1. Gasket
2. Exhaust manifold

A. To cylinder head

Refer to GI-4, "Components" for symbols in the figure.

Removal and Installation

INFOID:0000000001060437

REMOVAL

1. Remove battery ground cable.
2. Remove engine undercover.
3. Remove air cleaner case and air duct (inlet). Refer to EM-265, "Removal and Installation".
4. Remove wiper assembly.
5. Remove bulk head cover.
6. Remove EGR unit assembly. Refer to EM-268, "Removal and Installation".
7. Remove turbocharger assembly. Refer to EM-271, "Removal and Installation".
8. Loosen exhaust manifold mounting nuts in the reverse order as shown. Then remove exhaust manifold.

CAUTION:
Be careful not to deform each turbocharger piping when pulling out the assembly.

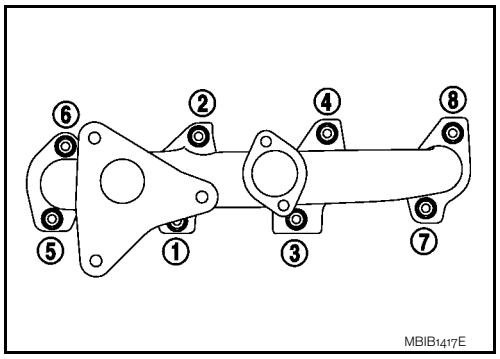

INSTALLATION

1. Clean the surface of exhaust manifold and cylinder head.
2. Install new gasket to cylinder head.

cardiagn.com

3. Tighten the mounting nuts in numerical order as shown.

   : 26.0 N·m (2.7 kg-m, 19 ft-lb)

4. Install in reverse order of removal after this step.

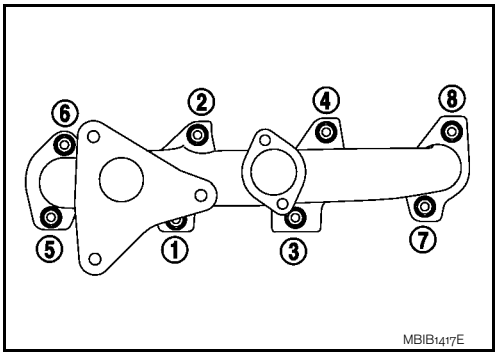

Inspection

INFOID:0000000001060438

INSPECTION AFTER INSTALLATION

Start engine and raise engine speed to check no exhaust emission leaks.

cardiagn.com

GLOW PLUG

Exploded View

INFOID:0000000001060276

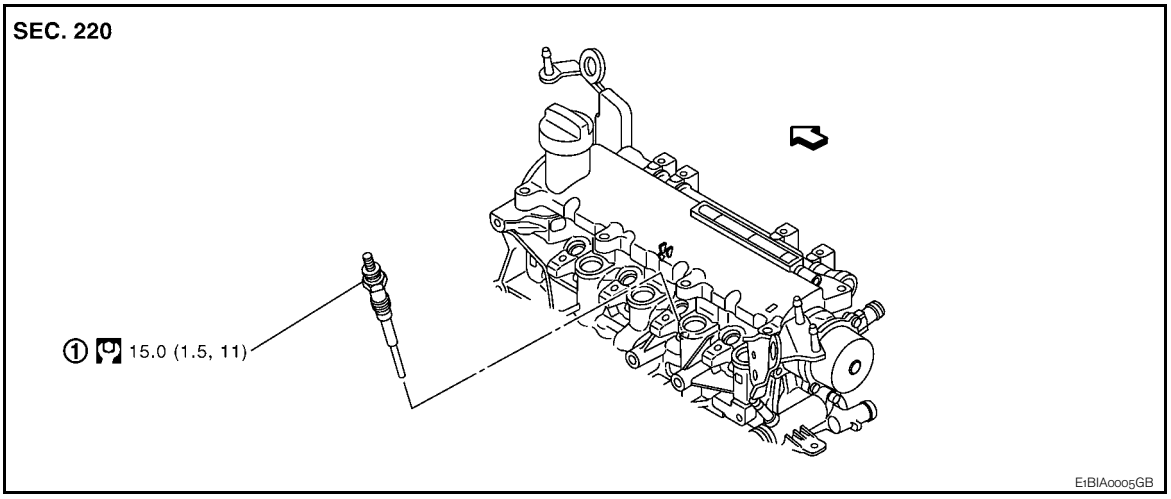

1. Glow plug

⇦ : Engine front

Refer to GI-4, "Components" for symbols in the figure.

Removal and Installation

INFOID:0000000001060439

REMOVAL

CAUTION:

Remove glow plug only if necessary. If carbon adheres, it may be stuck and broken.

1. Disconnect battery ground cable.
2. Remove engine cover. Refer to EM-266, "Removal and Installation".
3. Disconnect harness connector from glow plug.
4. Remove glow plug.

   CAUTION:
   - **When removing or installing, do not use such tools as an air impact wrench.**
   - **Handle it carefully without giving any impact, even after removal. [As a guide, if it drops from height of 10 cm (3.94 in) or higher, always replace it.]**

INSTALLATION

1. Remove adhered carbon from glow plug installation hole with a reamer.
2. Install glow plug.

   : 15.0 N·m (1.5 kg-m, 11 ft-lb)

3. Install remaining parts in reverse order of removal.

cardiagn.com

VACUUM PUMP

Exploded View

INFOID:0000000001060285

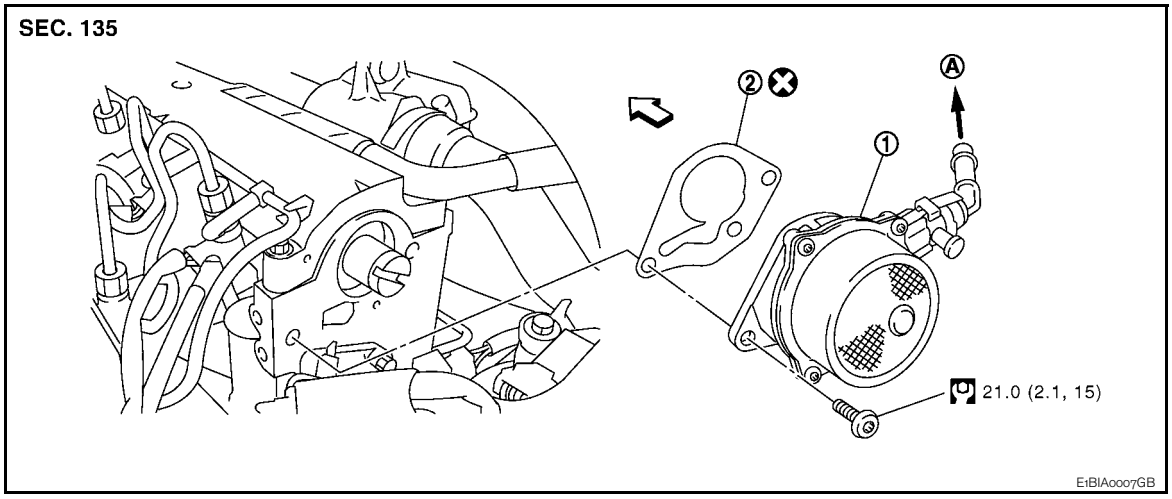

1. Vacuum pump
2. Gasket

A. To vacuum hose

⇦ : Engine front

Refer to GI-4, "Components" for symbols in the figure.

Removal and Installation

INFOID:0000000001060442

REMOVAL

1. Remove engine cover. Refer to EM-266, "Removal and Installation".
2. Remove battery.
3. Remove elctric throttle control actuator.
4. Disconnect vacuum hose from vacuum pump side.
5. Remove vacuum pump.

INSTALLATION

Install in the reverse order of removal.

Inspection

INFOID:0000000001060296

INSPECTION BEFORE REMOVAL

1. Disconnect vacuum hose, and connect a vacuum gauge via 3-way connector.
   - Disconnect point where vacuum from vacuum pump can be measured directly and install 3-way connector.
2. Start engine and measure generated vacuum at idle speed.

Standard

: – 86.6 to – 101.3 kPa (– 866 to – 1,013 mbar, – 650 to – 760 mmHg, – 25.59 to – 29.92 inHg)

cardiagn.com

INJECTION TUBE AND FUEL INJECTOR

Exploded View

INFOID:0000000001060309

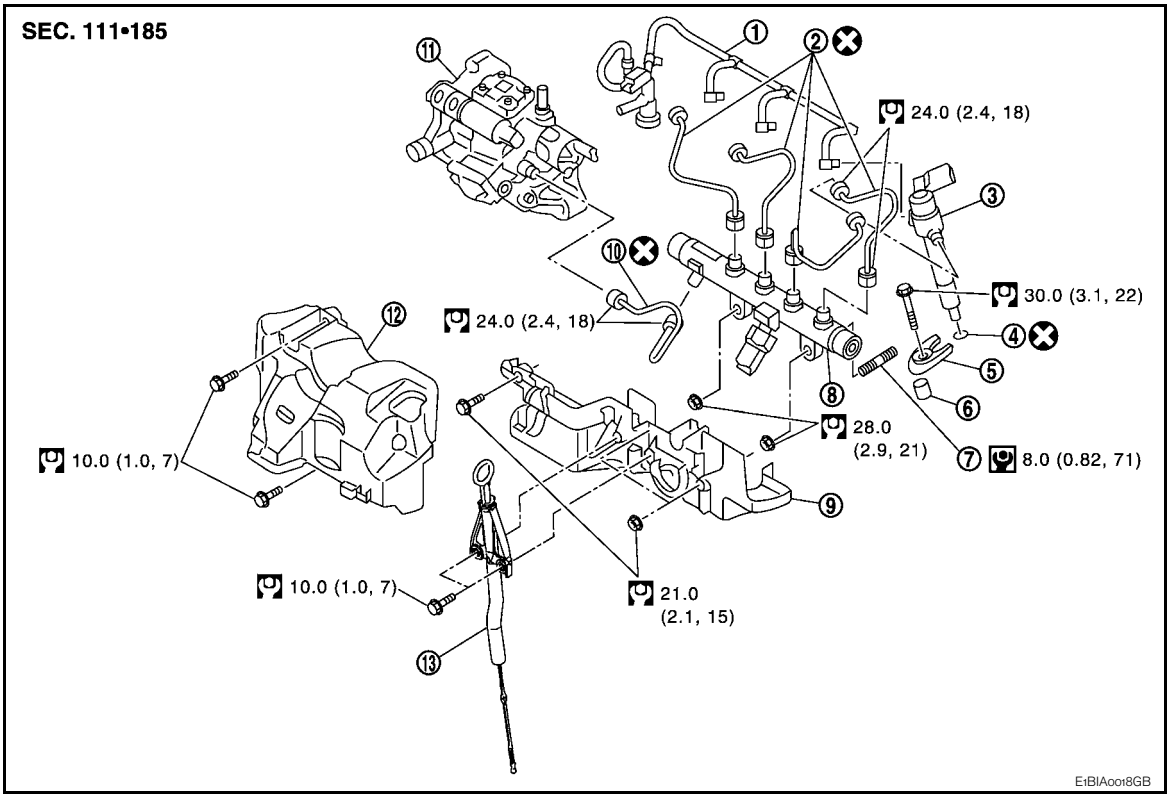

1. Spill hose	2. Injection tube	3. Fuel injector
4. Heat protection washer	5. Fuel injector bracket	6. Fuel injector bracket spacer
7. Fuel rail stud bolt	8. Fuel rail	9. High pressure protection cover (lower)
10. Injection tube	11. High pressure supply pump	12. High pressure protection cover (upper)
13. Oil level gauge guide		

Refer to GI-4, "Components" for symbols in the figure.

Removal and Installation

INFOID:0000000001060443

REMOVAL

CAUTION:

- **Be sure to read “Precautions for Diesel Equipment”. Refer to EM-249, "Precaution for Diesel Equipment".**
- **Wait until the fuel temperature drops before carrying out any work.**
- **Order the special high pressure injection circuit plug kit.**
- **It is forbidden to open an injector. If you open an injector by mistake, you will have to change it. This is because of the manufacturing and installation tolerances and because there is a risk of contaminating the inside of the injector.**
- **The rod filter of the injector must not be removed.**

NOTE:

It is possible to replace a single injection tube.

1. Disconnect the battery.
2. Remove engine cover. Refer to EM-266, "Removal and Installation".
3. Remove charge air cooler hose and pipes. Refer to EM-266, "Removal and Installation".
4. Remove oil level gauge guide and plug the hole.

cardiagn.com

5. Remove injection tube protection cover.
6. Remove the neck located on the fuel rail,
   NOTE:
   Undo the nut on the pump side or the injector side, then the nut located on the rail side. Undo the nuts for each pipe in turn. Move the nut along the pipe keeping the olive in contact with the taper.
7. Remove all the injection tubes.
8. Plug all the holes in the injection circuit.
9. Remove fuel rail.
10. Disconnect fuel return pipe.
11. Remove retaining clip and disconnect the diesel return pipe on the injector.
12. Plug all the holes of the injection circuit.
13. Disconnect the injector harness connector.
14. Unscrew the injector bracket.
15. Remove the injector.
16. Pull off the flame shield washer.

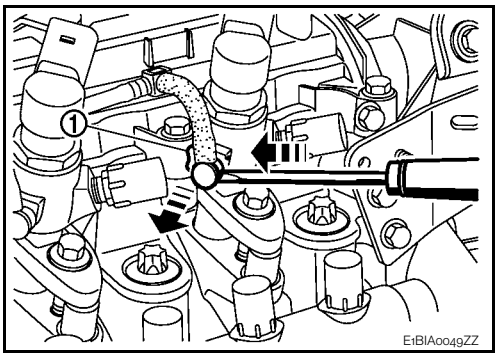

INSTALLATION

CAUTION:

All the injection tubes removed must be systematically replaced.

1. Clean the injector sockets and the injector bodies, as well as their brackets using a lint-free cloth (use the wipes recommended for this purpose, dipped in clean solvent.
2. Dry off using a different new wipe.
3. Replace the flame shield washer with a new one.
4. Position the injector.
5. Tighten its mounting bracket.

   : 30.0 N·m (3.1 kg-m, 22 ft-lb)
6. Install injection tubes with new one.
7. Finger tightens the nuts.
8. Before fitting the new injection tubes, lightly lubricate the nut threads with the oil from the sachet provided in the new parts kit.
   NOTE:
   Fit the pump/rail pipe before the rail/injector tubes.
9. Fit the pump-rail injection tube as follow:
   - Remove the protective plugs from the high pressure pump outlet, the high pressure rail inlet and the pipe.
   - Insert the injection tube olive into the taper of the high pressure pump outlet,
   - Insert the injection tube olive into the taper of the high pressure rail inlet.
   - Finger tighten the nuts of the injection tube starting with the one located on the rail side.
10. Install the rail-injector injection tube.
11. Tighten the injection tube nut.

    : 24.0 N·m (2.4 kg-m, 18 ft-lb)

cardiagn.com

12. Connect fuel return pipe to injector and install retaining clip.
13. Install in the reverse order to removal for the other refitting operations.

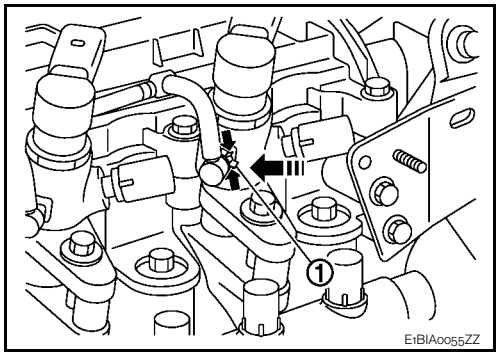

cardiagn.com

OIL PAN

Exploded View

INFOID:0000000001060322

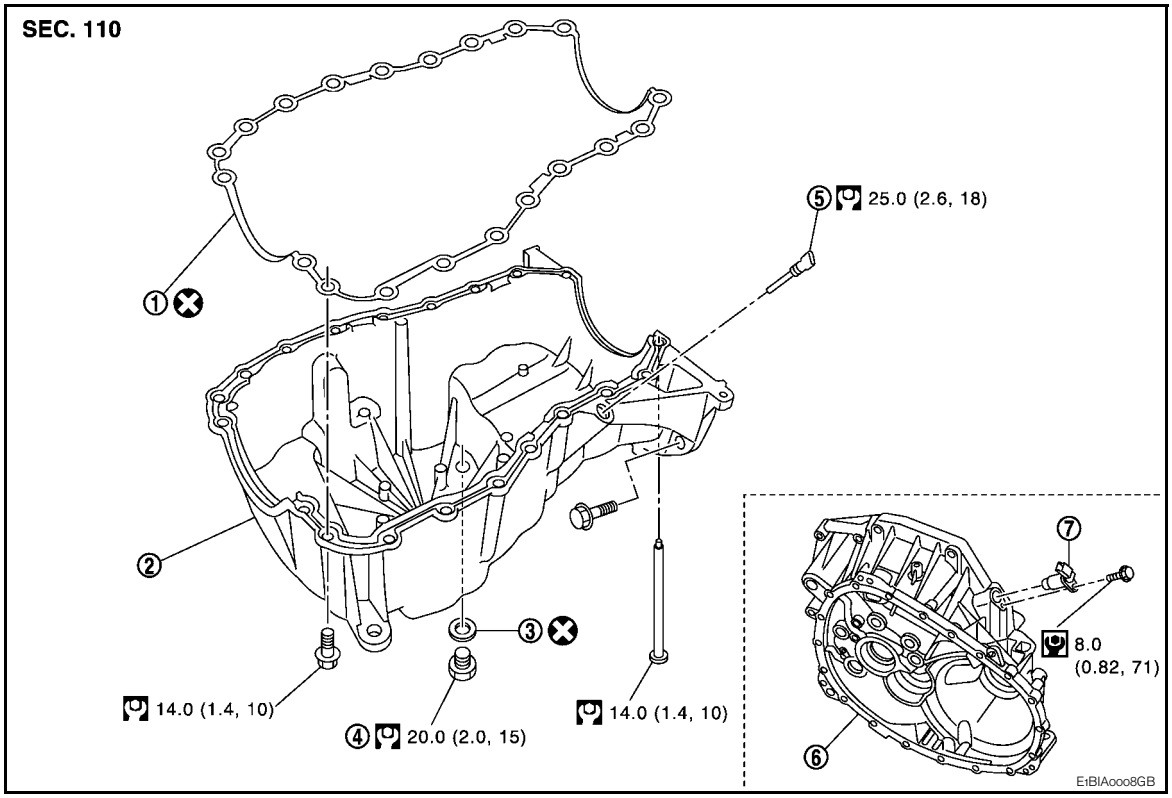

1. Gasket
2. Oil pan
3. O-ring
4. Drain plug
5. Oil level sensor
6. Clutch housing
7. Crankshaft position sensor

Refer to GI-4, "Components" for symbols in the figure.

Removal and Installation

INFOID:0000000001060447

CAUTION:
To avoid the danger of being scalded, never drain the engine oil when the engine is hot.

REMOVAL

1. Remove engine undercover.
2. Remove RH front wheel.
3. Remove right side splash cover.
4. Remove multifunction bracket mounting bolt as shown.
5. Remove bolts (3) from the catalyst bracket. Refer to EM-270, "Exploded View".
6. Remove oil level sensor.
7. Drain engine oil. Refer to LU-23, "Draining".
   CAUTION:
   Perform when engine is cold.

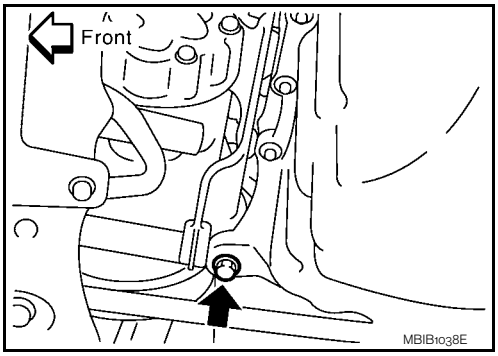

cardiagn.com

8. Remove oil pan and transaxle joint bolts.

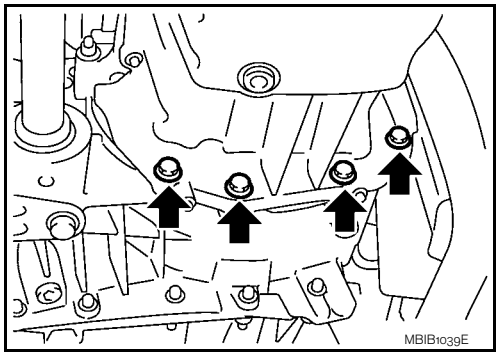

9. Support the engine bottom of the oil pan with a transmission jack etc.

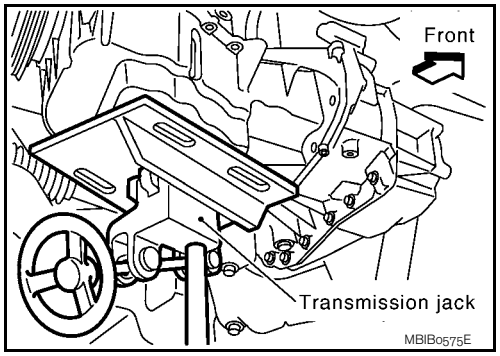

10. Remove oil pan bolt reverse order as shown.

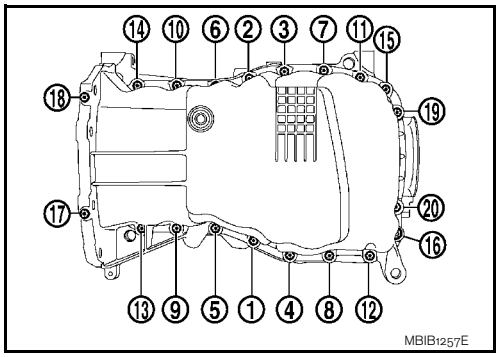

11. Insert seal cutter [SST: KV10111100 (—)] between upper oil pan and cylinder block. Slide tool by tapping on the side of the tool with a hammer.
CAUTION:
Exercise care not to damage mating surface.
12. Remove oil pan.

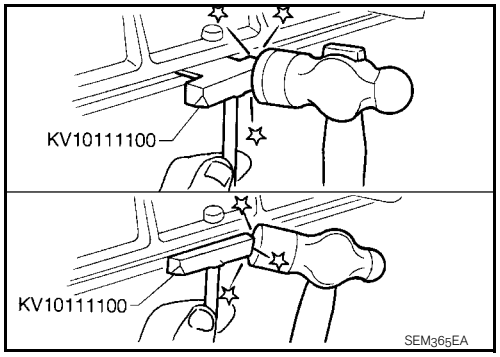

INSTALLATION

- Install in the reverse order of removal paying attention to the following.

cardiagn.com

1. Apply liquid gasket as shown.
   - Use Genuine Liquid Gasket or equivalent.

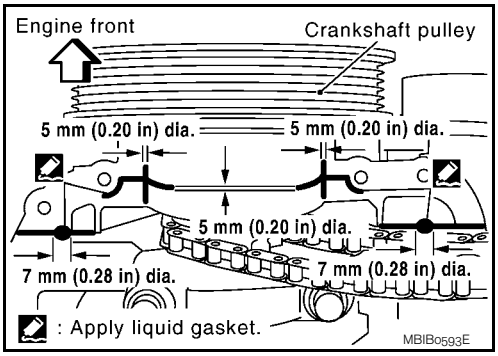

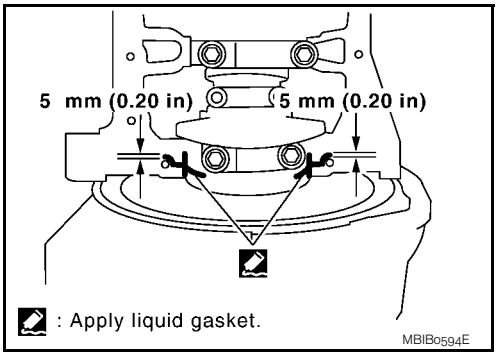

2. Using ruler, align the oil pan with the cylinder block.
3. Install oil pan bolts in numerical order as shown.

   : 14.0 N·m (1.4 kg-m, 10 ft-lb)

4. At least 30 minutes after oil pan is installed, pour engine oil.

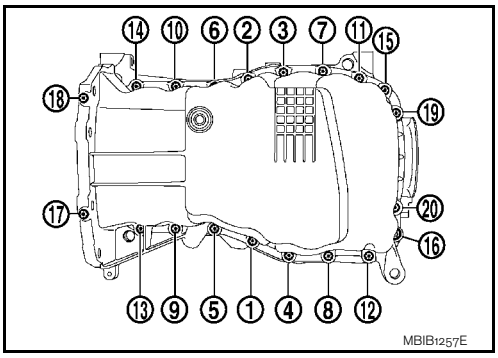

Inspection

INFOID:0000000001060324

INSPECTION AFTER REMOVAL

Clean oil pump assembly if any object attached.

INSPECTION AFTER INSTALLATION

- Inspection the engine oil level. Refer to LU-23, "Inspection".
- Start the engine, and make sure there is no leak of engine oil. Refer to LU-23, "Inspection".

cardiagn.com

HIGH PRESSURE SUPPLY PUMP

Exploded View

INFOID:0000000001060378

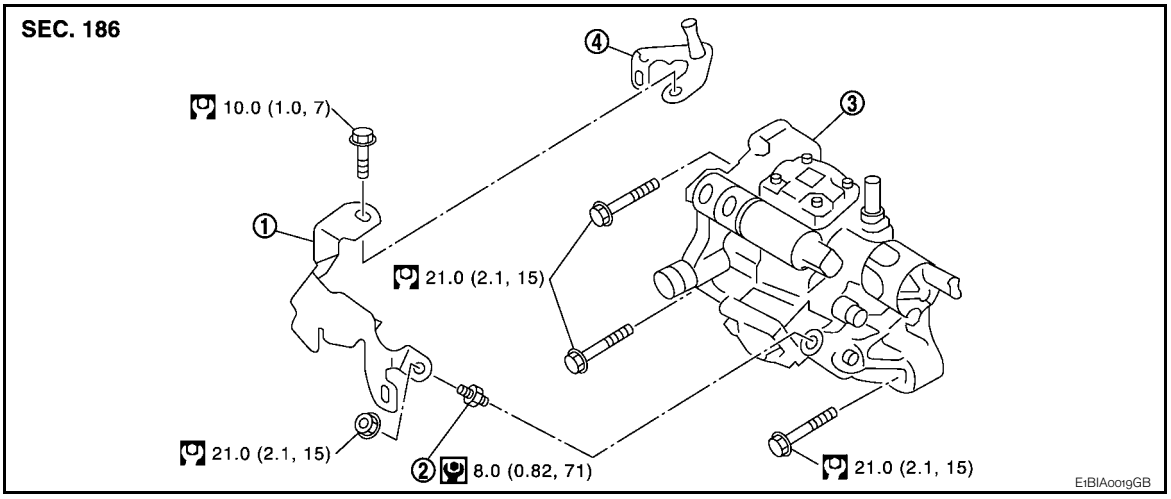

1. High pressure supply pump protector
2. Stud bolt
3. High pressure supply pump
4. Engine cover bracket

Refer to GI-4, "Components" for symbols in the figure.

Removal and Installation

INFOID:0000000001060462

REMOVAL

CAUTION:

- **Be sure to read “Precautions for Diesel Equipment”. Refer to EM-249, "Precaution for Diesel Equipment".**
- **Wait until the fuel temperature drops before carrying out any work.**
- **Order the special high pressure injection circuit plug kit.**
- **It is strictly forbidden to remove any high pressure supply pump sprocket marked number 070 575 (see diagram). If the pump is being replaced, the pulley must be replaced.**

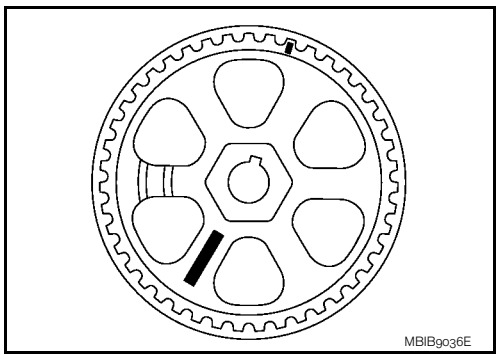

1. Disconnect the battery.
2. Remove engine cover. Refer to EM-266, "Removal and Installation".
3. Remove charge air cooler hose and pipes. Refer to EM-266, "Removal and Installation".
4. Remove the timing belt. Refer to EM-287, "Removal and Installation".
5. Remove the neck located on the fuel rail,
6. Remove the oil level gauge guide and plug the hole. Refer to EM-277, "Exploded View".
7. Remove high pressure protection cover. Refer to EM-277, "Exploded View".
8. Carefully disconnect:
   - The connectors from the flow actuator,
   - The connectors from the fuel temperature sensor,
   - On the pump, the fuel supply and return pipes.
   - The return pipe connecting the injectors with the pump.
9. Remove the injection tube connecting the pump to the rail. Refer to EM-277, "Removal and Installation".
10. Plug all the holes of the injection circuit.
11. Remove the three mounting bolts from the high pressure supply pump then remove it.

INSTALLATION

cardiagn.com

1. Install the pump then position the mounting bolts without tightening them.
2. Before fitting the new injection tube, lightly lubricate the nut threads with the oil from the sachet provided in the new parts kit.
3. Refit the injection tube, to do this:
   - remove the protective plugs,
   - insert the injection tube olive into the taper of the high pressure pump outlet,
   - insert the injection tube olive into the taper of the high pressure rail inlet.
4. Finger tighten the nuts of the injection tube starting with the one located on the rail side.
5. Tighten the mounting bolts on the high pressure pump.

   : 21.0 N·m (2.1 kg-m, 15 ft-lb)

6. Tighten the injection tube nut.

   : 24.0 N·m (2.4 kg-m, 18 ft-lb)

7. Refit in the reverse order to removal for the other refitting operations.
8. Test the sealing of the high pressure after it has been repaired (refer to “SPECIAL FEATURES” in EM-249, "Precaution for Diesel Equipment").

cardiagn.com

ROCKER COVER

Exploded View

INFOID:0000000001060356

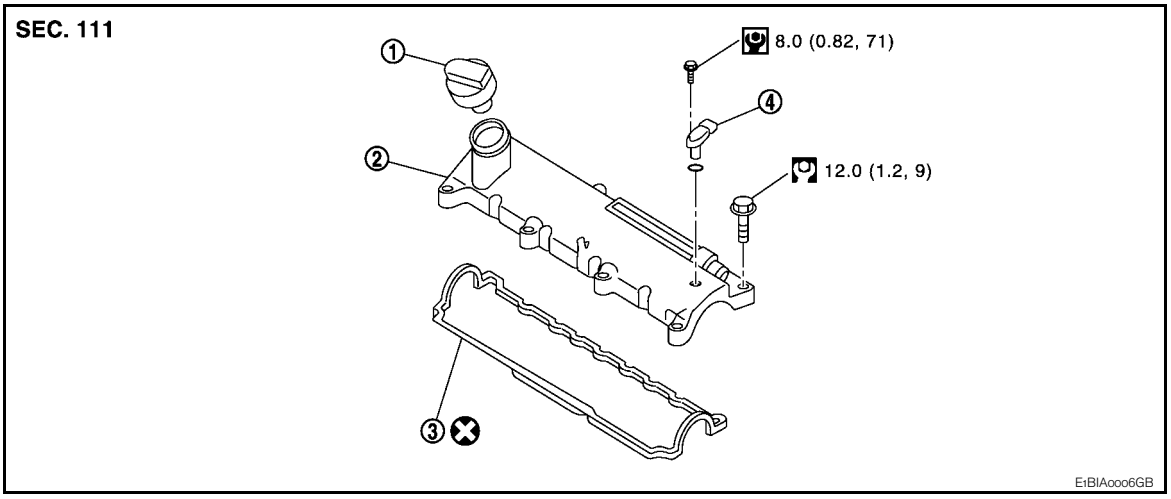

1. Oil filler cap
2. Rocker cover
3. Gasket
4. Camshaft position sensor

Refer to GI-4, "Components" for symbols in the figure.

Removal and Installation

INFOID:0000000001060455

REMOVAL

1. Remove engine cover. Refer to EM-266, "Removal and Installation".
2. Remove air duct (suction). Refer to EM-265, "Exploded View".
3. Remove inlet pipe assembly and air inlet hose, and inlet pipe bracket. Refer to EM-266, "Removal and Installation".
4. Remove rear engine slinger.
5. Unclip timing belt upper cover.
6. Remove rocker cover.
   Loosen holding bolts in the reverse order as shown in the figure and remove.

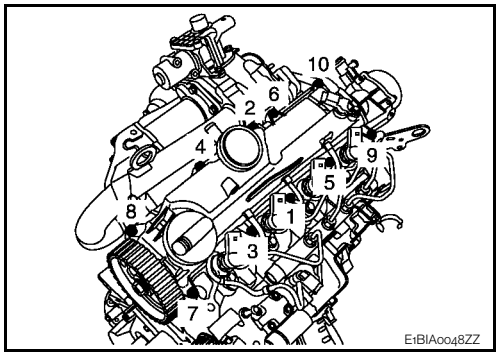

INSTALLATION

1. Install new gasket to gasket.

cardiagn.com

2. Apply liquid gasket on locations shown in the figure.
   Use Genuine Liquid gasket or equivalent.

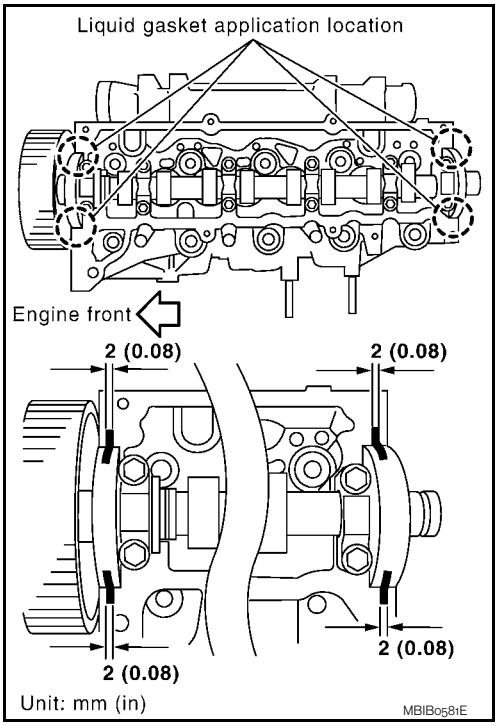

3. Tighten holding bolts in the numerical order as shown in the figure.

   : 12.0 N·m (1.2 kg-m, 9 ft-lb)

4. Install in the reverse order of removal after this steps.

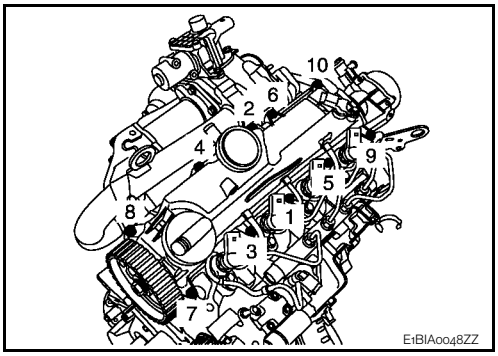

cardiagn.com

TIMING BELT

Exploded View

INFOID:0000000001060385

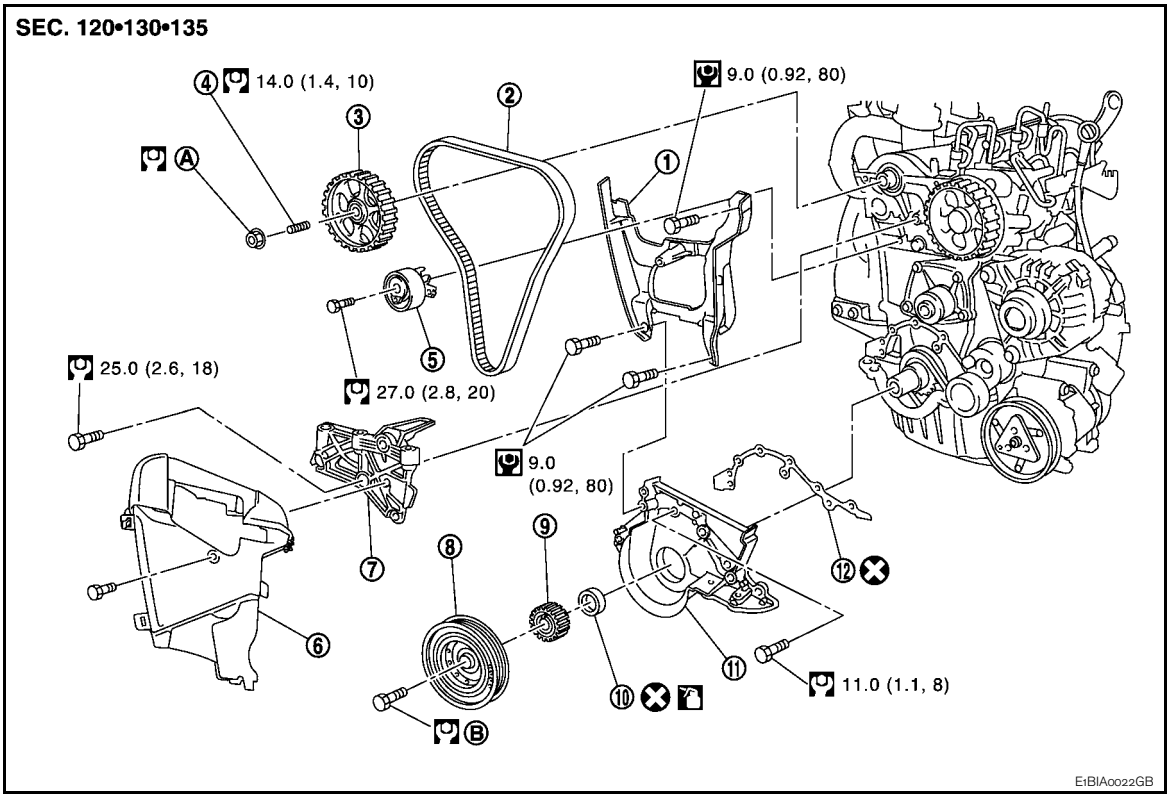

1. Timing belt inner cover	2. Timing belt	3. Camshaft sprocket
4. Camshaft sprocket stud bolt	5. Timing belt tensioner	6. Timing belt cover
7. Cylinder head suspended bracket	8. Crankshaft pulley	9. Crankshaft sprocket (timing belt)
10. Oil seal	11. Crankshaft cover	12. Gasket

A. 30.0 N·m (3.1 kg-m, 22 ft-lb) and 86 degrees

B. 120.0 N·m (12 kg-m, 89ft-lb) and 95 degrees

Refer to GI-4, "Components" for symbols in the figure.

Removal and Installation

INFOID:0000000001060465

CAUTION:
- **Apply new engine oil to parts marked in illustration before installation.**
- **Replace any belt that has been removed.**
- **Never turn the engine in the direction opposite to that of normal operation.**
- **When replacing the timing belt, be sure to replace the timing belt tensioner.**
- **Do not run the engine without the drive belts to avoid damaging the crankshaft pulley.**

REMOVAL

1. Remove the following parts.
   - Battery ground cable
   - Undercover
   - RH front wheel
   - RH head light assembly
2. Remove right side splash cover.
3. Remove engine cover. Refer to EM-266, "Removal and Installation".
4. Remove drive belt. Refer to EM-287, "Removal and Installation".
5. Remove RH engine torque rod.

cardiagn.com

6. Remove RH engine mounting.
7. Remove RH engine mounting support bracket, RH engine mounting insulator and reservoir tank.
8. Remove upper timing cover.

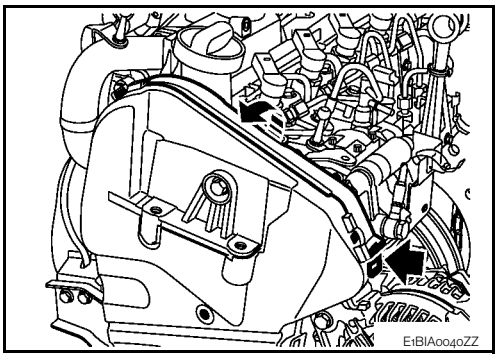

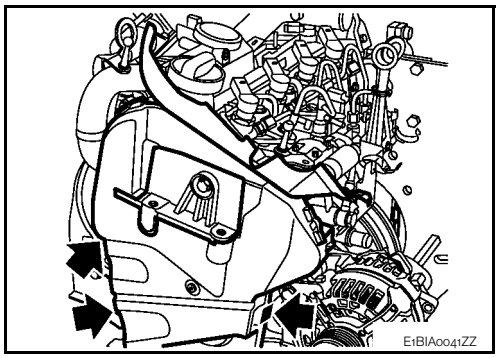

9. Remove cylinder head suspended mounting bracket (1).
10. Remove timing belt lower cover.

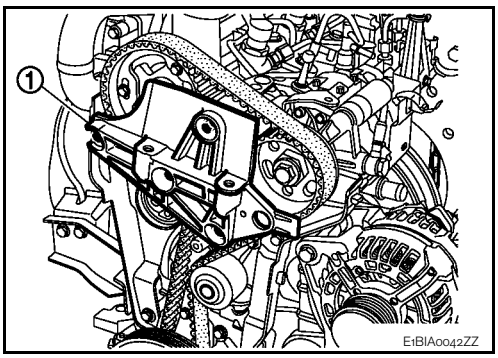

11. Remove the TDC pin plug.

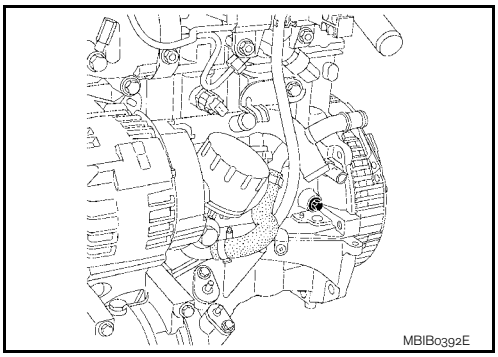

cardiagn.com

12. Rotate the crankshaft clockwise, until the position (A) of the came shaft pulley becomes opposite of the position (B) on the cylinder head.

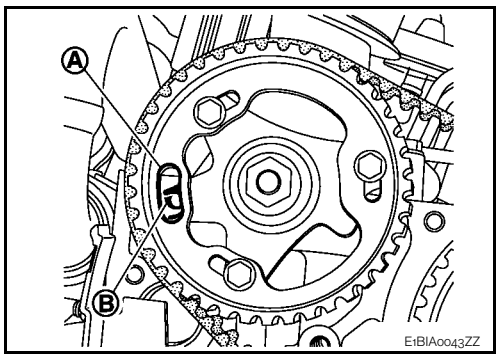

13. Insert TDC set pin [SST: KV113B0110 (Mot.1430)] (A) into the camshaft sprocket and cylinder head hole.

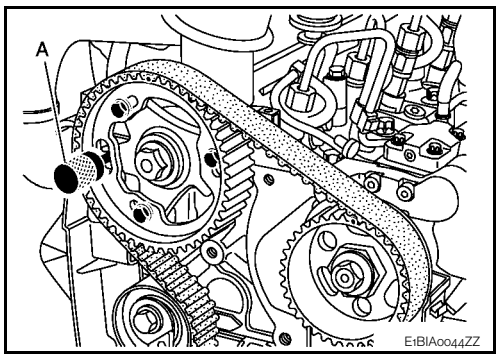

14. Screw in the TDC set pin [SST: KV113 B0130 (Mot. 1439)].

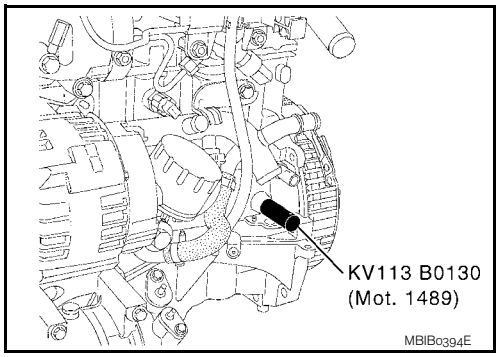

15. Turn the engine clockwise (timing side) until the crankshaft touches the TDC set pin.

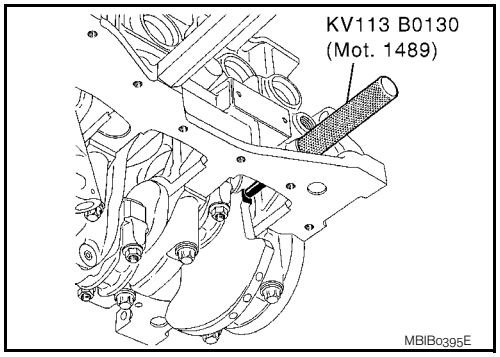

16. The pin [SST: KV113B0110 (Mot.1430)] (A) must engage in the camshaft pulley and cylinder head holes.
17. Remove crankshaft position sensor. Refer to EM-280, "Exploded View".

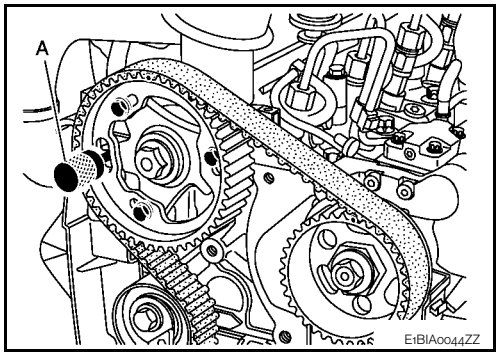

cardiagn.com

18. Insert flat-bladed screwdriver into place of crankshaft position sensor to block crankshaft and loosen crankshaft pulley bolt (1).
19. Remove crankshaft pulley.
    CAUTION:
    Do not remove fixing bolts. Keep loosened fixing bolts in place to protect removed crankshaft pulley from dropping.

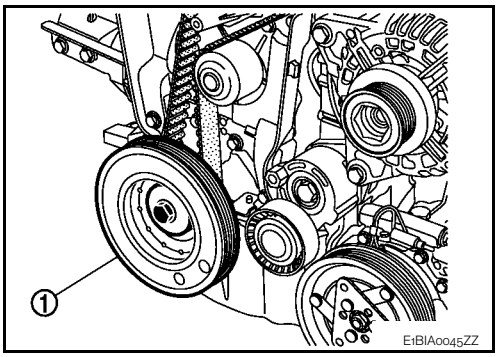

20. Slacken the timing belt by loosening the bolt of tensioner (1), then remove timing belt.

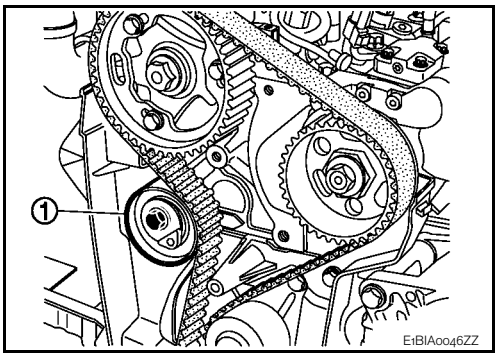

INSTALLATION

CAUTION:

It is essential to degrease the end of the crankshaft, the bore of the crankshaft sprocket and the bearing faces of the drive belt pulley to prevent any slip between the timing and the crankshaft which would risk destroying the engine.

1. Install timing belt tensioner.
   NOTE:
   Put the timing belt tensioner spigot (1) in the cylinder head groove.
2. Insert TDC set pin [SST: KV113B0110 (Mot. 1430)] (A) in the camshaft pulley and cylinder head holes.
3. Check that high pressure supply pump sprocket mark (2) has shifted one tooth to the right of vertical axle.

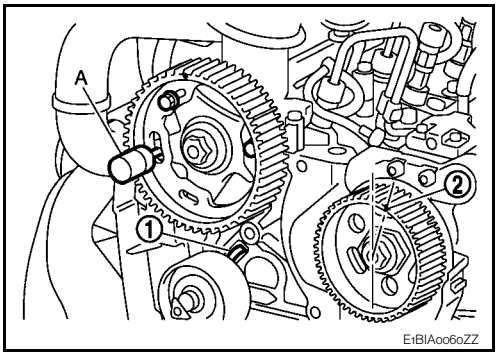

4. Turn crankshaft to set TDC set pin [SST: KV113B0130 (Mot. 1489)] (the crankshaft groove (1) must be facing upwards).

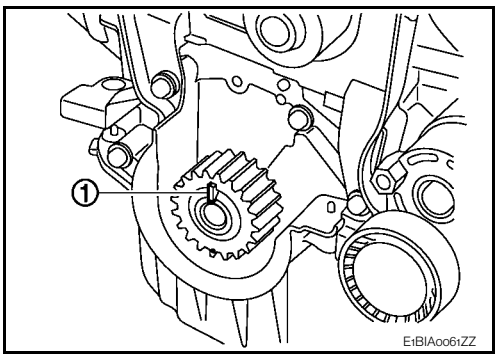

cardiagn.com

5. Tighten old crankshaft pulley bolt with a spacer (1) (which does not cover the timing sprocket mark).

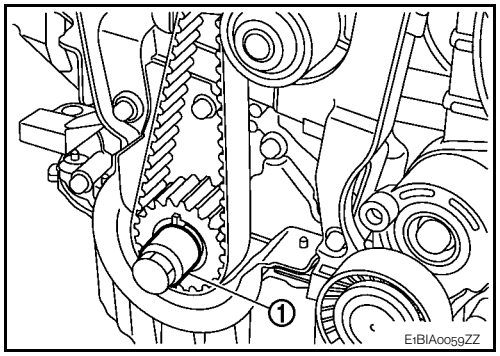

6. Insert TDC set pin [SST: KV113B0130 (Mot.1489)] to crankshaft.

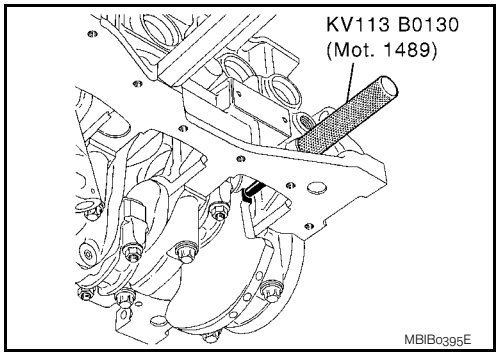

7. Remove one wheel bolt from camshaft sprocket, and then loosen the other two bolts (1).
8. Install the timing belt, aligning the marks on the bolt with those on the camshaft and high pressure supply pump sprockets (19 teeth spaces on the belt between the marks on the camshaft and pump sprockets).

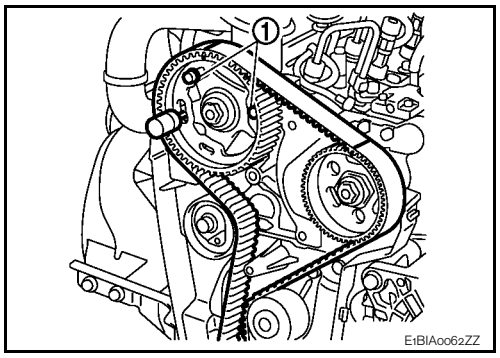

9. Using a 6 mm (0.24 in) Allen key, move the movable index (F) of the drive belt tensioner into the position as shown in the figure, by turning the key counterclockwise.
10. Tighten timing belt tensioner bolt.

: 27.0 N·m (2.8 kg-m, 20 ft-lb)

11. Check that the camshaft sprocket bolts are not fully up against the camshaft sprocket wheel.
12. Install and tighten camshaft sprocket wheel bolts.

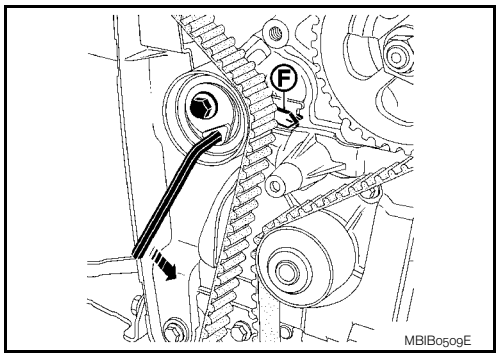

: 14.0 N·m (1.4 kg-m, 10 ft-lb)

13. Remove TDC set pin [SST: KV113B0130 (Mot. 1489)] and TDC set pin [SST: KV113B0110 (Mot. 1430)].

cardiagn.com

14. Turn the crankshaft two revolutions in a clockwise direction (timing side). Just before the hole (A) of the camshaft pulley is opposite the cylinder head hole (B), insert TDC set pin [SST: KV113B0130 (Mot. 1489)] into the cylinder block.
15. Then turn the crankshaft slowly and smoothly against TDC set pin.

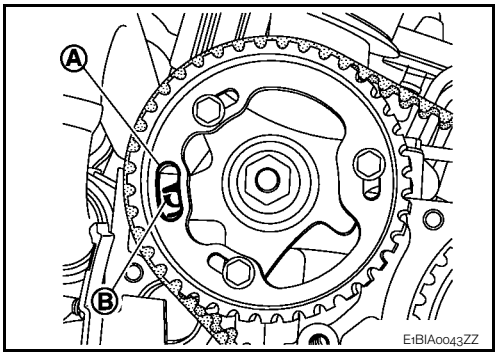

16. Insert TDC set pin [SST: KV113B0110 (Mot. 1430)] (A).
    If the pin cannot be inserted, perform the following.
    a. Remove TDC set pin [SST: KV113B0130 (Mot. 1489)].
    b. Loosen camshaft sprocket wheel bolts.
    c. Turn camshaft pulley to adjust.
    d. Confirm that the crankshaft sprocket groove is facing upward.
    e. Loosen timing belt tensioner bolt.

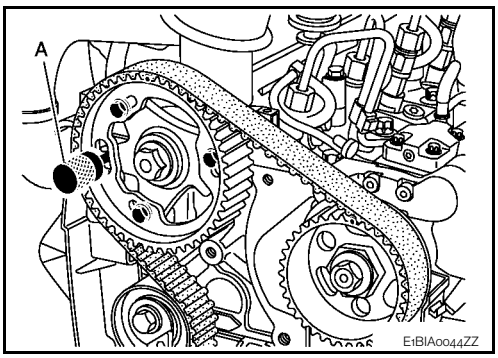

    f. Move the movable index of the drive belt tensioner into the position as shown in the figure, by turning the key clockwise.
    g. Tighten timing belt tensioner bolt.

    : 27.0 N·m (2.8 kg-m, 20 ft-lb)

    h. Install and tighten camshaft sprocket wheel bolts.

    : 14.0 N·m (1.4 kg-m, 10 ft-lb)

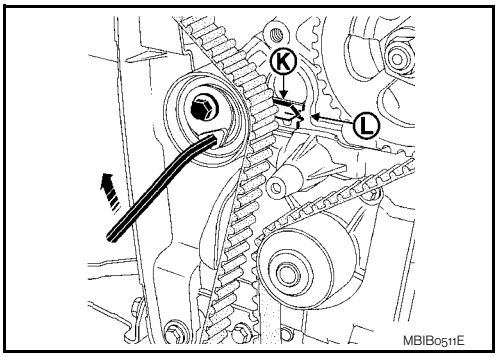

    i. Turn the crankshaft two revolutions in a clockwise direction (timing side). Just before the hole (A) of the camshaft pulley is opposite the cylinder head hole (B), insert TDC set pin [SST: KV113B0130 (Mot. 1489)] into the cylinder block.
    j. Then turn the crankshaft slowly and smoothly against TDC set pin.

17. Install crankshaft pulley and tighten the bolt (1).

    : 120 N·m (12 kg-m, 89 ft-lb)

18. Turn bolt 95 degrees clockwise.
    CAUTION:
    Check and confirm the tightening angle by using the angle wrench [SST: KV10112100 (—)] or protractor. Avoid judgment by visual inspection without the tool.
19. Remove TDC set pin [SST: KV113B0130 (Mot. 1489)] and TDC set pin [SST: KV113B0110 (Mot. 1430)].
20. Apply liquid gasket to the thread of TDC pin plug.
21. Install TDC pin plug.

    : 20 N·m (2.0 kg-m, 15 ft-lb)

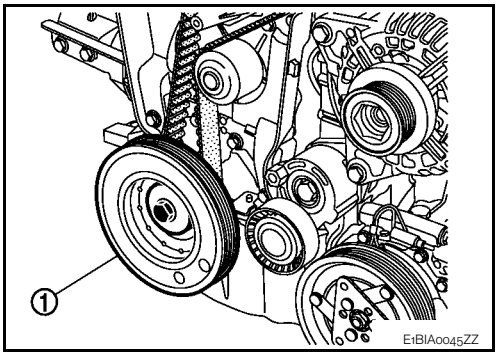

cardiagn.com

22. Install the cylinder head suspended bracket (1).

: 21 N·m (2.1 kg-m, 15 ft-lb)

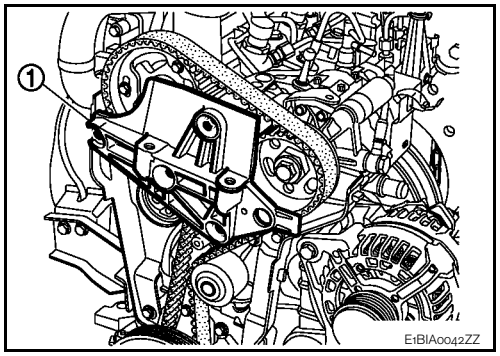

23. Install the timing cover by positioning the tab (M) into the hole (N) on the inner timing cover.
24. Install in the reverse order of removal after this step.

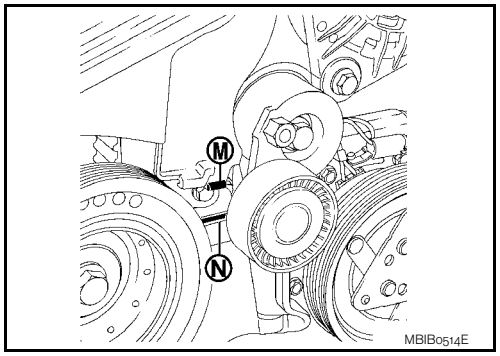

cardiagn.com

CAMSHAFT

Exploded View

INFOID:0000000001060388

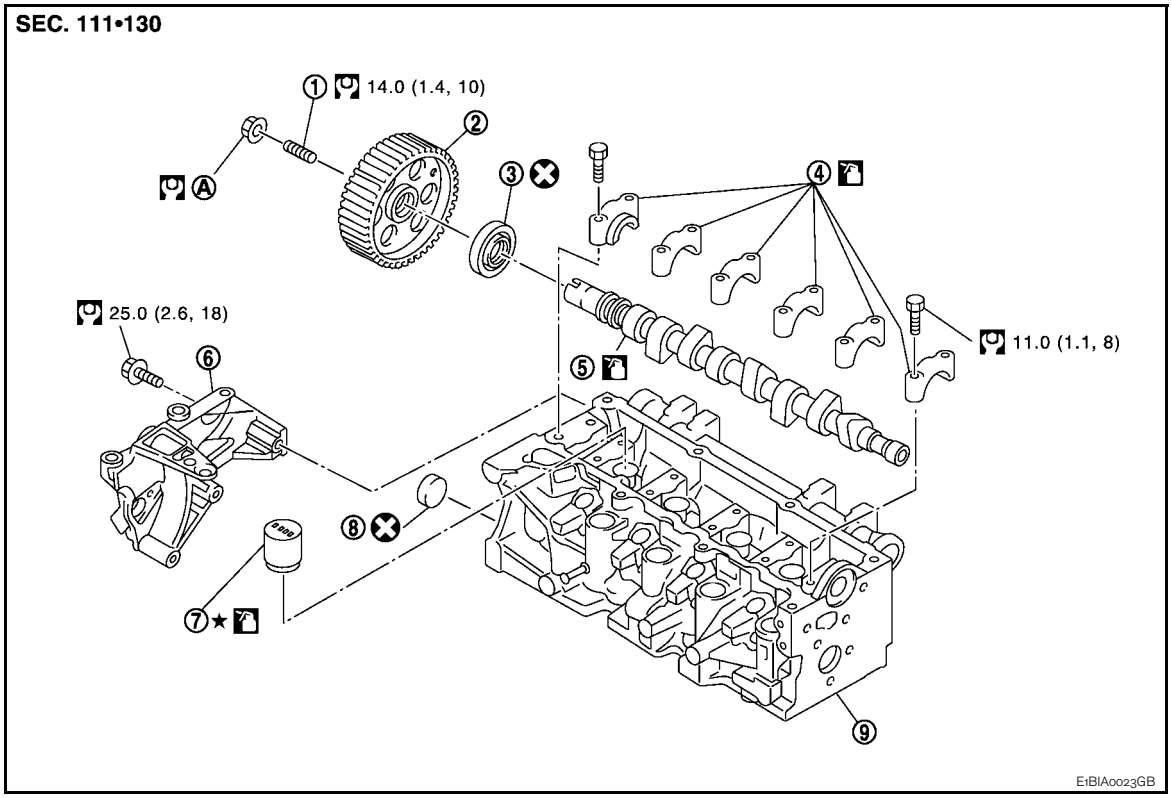

1.	Camshaft sprocket stud bolt	2.	Camshaft sprocket	3.	Oil seal
4.	Camshaft bracket	5.	Camshaft	6.	Cylinder head suspended bracket
7.	Valve lifter	8.	Cap	9.	Cylinder head

A. 30.0 N·m (3.1 kg-m, 22 ft-lb) and 86 degrees

Refer to GI-4, "Components" for symbols in the figure.

Removal and Installation

INFOID:0000000001060479

CAUTION:
Apply new engine oil to parts marked in illustration before installation.

REMOVAL

1. Remove the following parts.
   - Battery ground cable
   - Undercover
   - RH front wheel
   - RH head light assembly
2. Remove right side splash cover.
3. Remove engine cover. Refer to EM-287, "Removal and Installation".
4. Remove air inlet tube and electric throttle control actuator. Refer to EM-266, "Removal and Installation" and EM-268, "Removal and Installation".
5. Remove vacuum pump. Refer to EM-276, "Removal and Installation".
6. Remove air inlet tube. Refer to EM-266, "Removal and Installation".
7. Remove drive belt. Refer to EM-259, "Removal and Installation".
8. Remove rocker cover. Refer to EM-285, "Removal and Installation".
9. Support underneath of engine by setting a manual lift table caddy (commercial service tool) or equivalent tool.

cardiagn.com

CAUTION:
Put a piece of wood or something similar as supporting surface, secure a completely stable condition.

10. Remove timing belt. Refer to EM-287, "Removal and Installation".
11. Remove camshaft brackets.
12. Remove camshaft.
13. Remove valve lifter.

INSTALLATION

1. Install valve lifter.
2. Install camshaft.
3. Install camshaft bracket and tighten bolts in numerical order as shown in the figure.

   : 11 N·m (1.1 kg-m, 8 ft-lb)

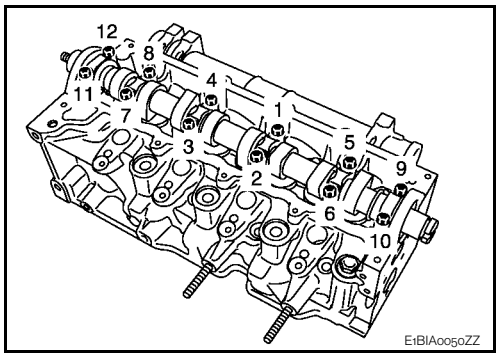

4. Screw the shouldered rod of camshaft seal insert [SST: KV113B0230 (Mot. 1632)] onto the stud of the camshaft.
5. Install the old seal on the camshaft.

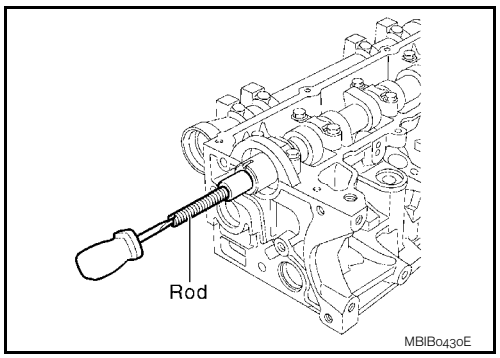

6. For the new seal, put the protector with the seal on the camshaft, taking care not to touch the seal.

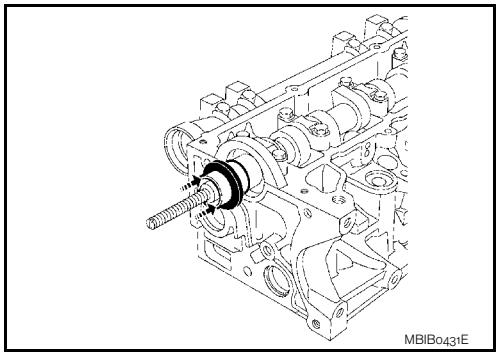

7. Install the cover (E) and the collar nut (F) of camshaft seal insert [SST: KV113B0230 (Mot. 1632)].

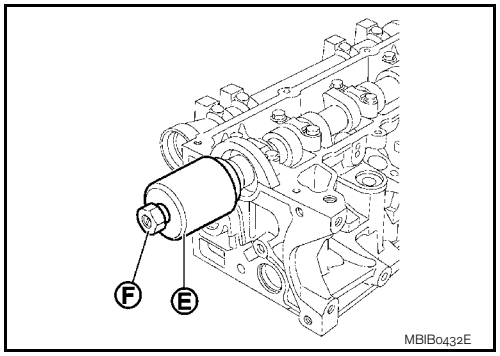

cardiagn.com

8. Screw the collar nut until the cover touches the cylinder head.
9. Install vacuum pump. Refer to EM-276, "Removal and Installation".

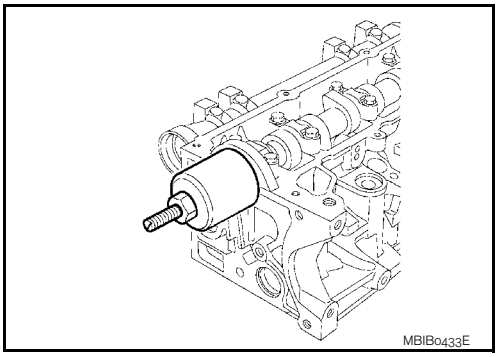

10. Install camshaft sprocket and sprocket holder [SST: — (Mot. 1606-A)] (A).
11. Install timing belt. Refer to EM-287, "Removal and Installation".
12. Install in the reverse order of removal.

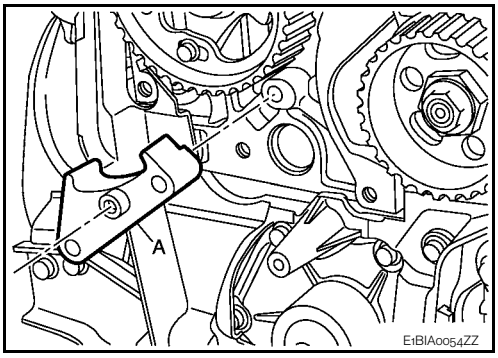

Inspection

INFOID:0000000001060480

INSPECTION AFTER REMOVAL

Camshaft Runout

1. Put V-block on a precise flat table, and support No. 2 and 4 journal of camshaft.
   CAUTION:
   Never support No. 1 journal (on the side of camshaft sprocket) because it has a different diameter from the other four locations.
2. Set dial indicator (A) vertically to No. 3 journal.
3. Turn camshaft to one direction with hands, and measure the camshaft runout on dial indicator. (Total indicator reading)

   Standard : Refer to EM-329, "Camshaft".

4. If it exceeds the limit, replace camshaft.

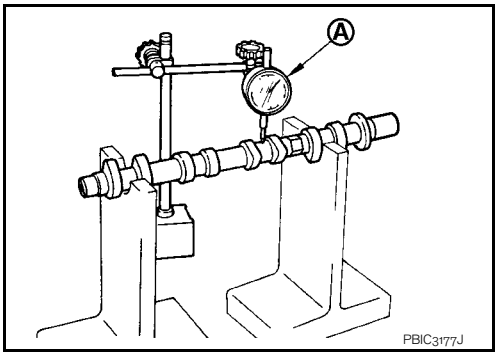

Camshaft Cam Height

1. Measure the camshaft cam height with a micrometer (A).

   Standard : Refer to EM-329, "Camshaft".

2. If it exceeds the limit, replace camshaft.

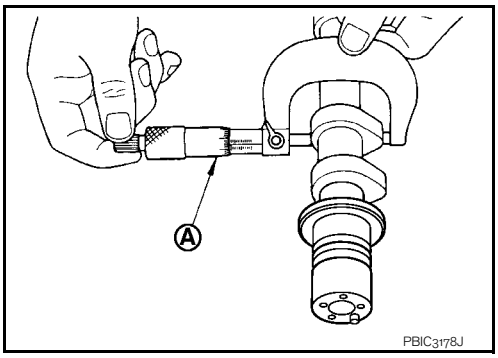

Camshaft End Play

cardiagn.com

1. Install the camshaft.
2. Install the camshaft brackets.
3. Check the end play.

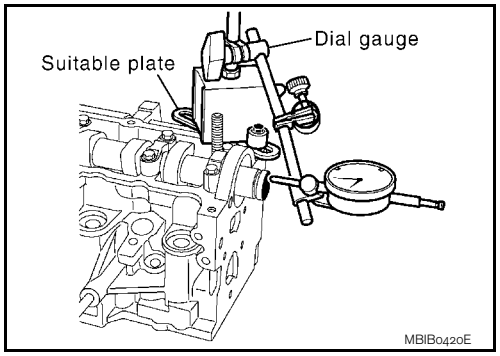

Standard : Refer to EM-329, "Camshaft".

Valve Lifter

1. Measure outer diameter of valve lifter.

Intake and exhaust : Refer to EM-329, "Camshaft"

2. Measure inner diameter of valve lifter hole in cylinder head.

Intake and exhaust : Refer to EM-329, "Camshaft"

3. Calculate the valve lifter clearance.
(Valve lifter clearance) = (Valve lifter hole inner diameter) – (Valve lifter diameter)

Intake and exhaust : Refer to EM-329, "Camshaft"

cardiagn.com

REMOVAL AND INSTALLATION

ENGINE ASSEMBLY

Exploded View

INFOID:0000000001060481

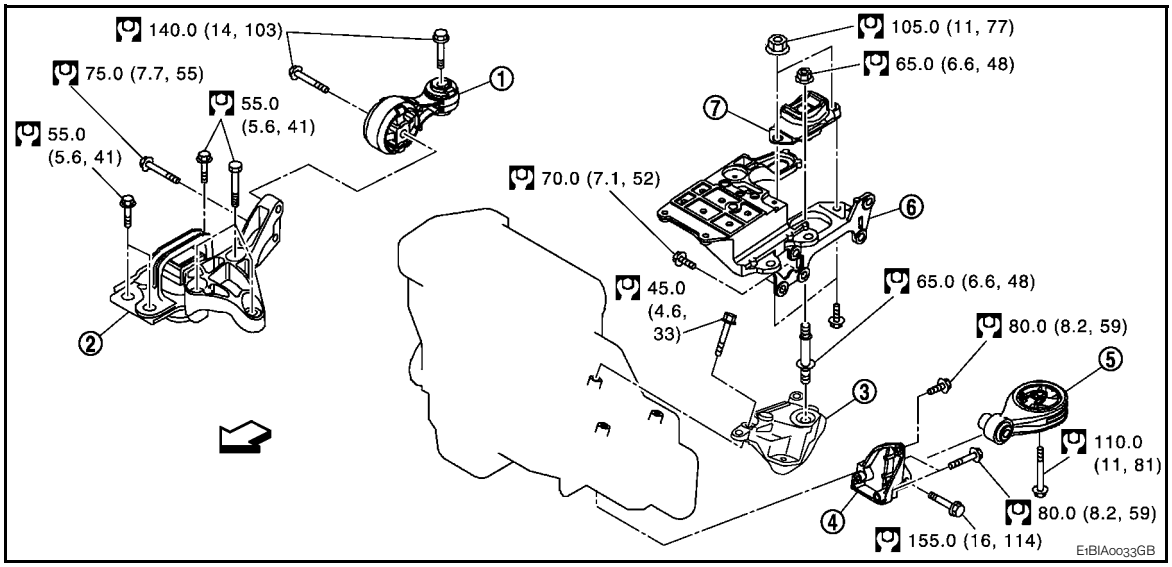

1. Engine torque rod RH
2. Engine mouting insulator RH
3. Engine mouting bracket LH
4. Rear torque rod bracket
5. Rear torque rod
6. Engine mounting frame support LH
7. Engine mouting insulator LH

⇦ : Vehicle front

Refer to GI-4, "Components" for symbols in the figure.

Removal and Installation

INFOID:0000000001060482

WARNING:
- **Situate vehicle on a flat and solid surface.**
- **Place chocks at front and back of rear wheels.**
- **For engines not equipped with engine slingers, attach proper slingers and bolts described in PARTS CATALOG.**

CAUTION:
- **Always be careful to work safely, avoid forceful or uninstructed operations.**
- **Do not start working until exhaust system and coolant are cool enough.**
- **If items or work required are not covered by the engine main body section, refer to the applicable sections.**
- **Always use the support point specified for lifting.**
- **Use either 2-pole lift type or separate type lift as best you can. If board-on type is used for unavoidable reasons, support at the rear axle jacking point with transmission jack or similar tool before starting work, in preparation for the backward shift of center of gravity.**
- **For supporting points for lifting and jacking point at rear axle, refer to GI-33, "Garage Jack and Safety Stand and 2-Pole Lift" or GI-34, "Board-On Lift".**

REMOVAL

Description of Work

Remove engine and transaxle assembly from vehicle down ward. Separate engine and transaxle.

Preparation

Remove the following parts.
- Battery ground cable
- Undercover
- Right side splash cover

cardiagn.com

- LH/RH front wheel
- RH head light assembly

Engine Room

1. Drain engine coolant. Refer to CO-52, "Draining".
   CAUTION:
   Perform when engine is cold.
2. Remove engine cover. Refer to EM-266, "Removal and Installation".
3. Remove air cleaner case and air duct (suction). Refer to EM-265, "Exploded View".
4. Remove radiator upper hose. Refer to CO-56, "Exploded View".
5. Remove reservoir tank and hoses. Refer to CO-56, "Exploded View".
6. Remove fuel feed and return tubes.
7. Remove vacuum hose. Refer to EM-276, "Removal and Installation".
8. Remove turbocharger air duct. Refer to EM-271, "Removal and Installation".
9. Disconnect heater hoses.
10. Disconnect engine room harness from the engine side and set it aside for easier work.
11. Disconnect transaxle side harness and clutch hose.
12. Disconnect drain hose transaxle side.
13. Disconnect shift cable and select cable. Refer to TM-63, "Removal and Installation".
14. Loosen wire bracket.
15. Disconnect all the body-side vacuum hoses and air hoses at engine side.
16. Disconnect fuel feed and return hoses, and plug it to prevent fuel from draining.

Vehicle Underbody

1. Remove drive shaft lock pin and lock nut. Refer to FAX-33, "K9K MODELS : Removal and Installation".
2. Remove ABS sensor from brake caliper.
3. Remove strut lower bolts.
4. Remove drive shaft assembly RH and LH.
5. Remove drive belt. Refer to EM-259, "Removal and Installation".
6. Remove A/C compressor with piping connected from engine. Temporarily secure it on body with a rope to avoid putting load on it.
7. Remove exhaust front tube. Refer to EX-15, "Removal and Installation".
8. Remove engine rear mounting bracket.

Removal

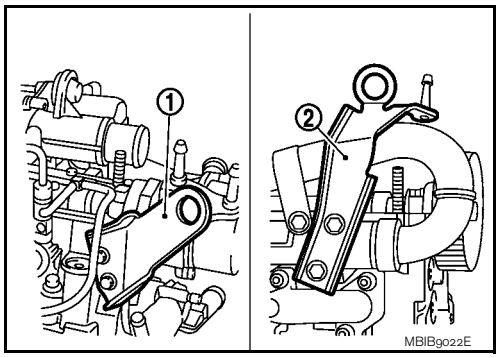

1. Install engine slingers (1) into front right of cylinder head and engine slinger (2) into rear left of cylinder head.
2. Use a manual lift table caddy (commercial service tool) or equivalently rigid tool such as a jack or trestle. Securely support bottom of engine and transaxle.
   CAUTION:
   Put a piece of wood or something similar as the supporting surface, secure a completely stable condition.
3. Remove RH and LH engine mounting bolts.
4. Remove engine and transaxle assembly from vehicle downward by carefully operating supporting tools.
   CAUTION:
   - **During the operation, make sure that no part interferes with body side.**
   - **Before and during this lifting, always check if any harnesses are left connected.**
   - **During the removal operation, always be careful to prevent vehicle from falling off the lift due to changes in the center of gravity.**
   - **If necessary, support vehicle by setting a jack or equivalent tool at the rear.**

Separation Work

CAUTION:

cardiagn.com

During the operation, secure support the engine by placing a piece of wood under the engine oil pan, transaxle oil pan and suspended the engine slinger by baby crane (movable hoist) etc.

1. Remove starter motor.
2. Separate engine and transaxle.
3. Lift with a hoist and separate the engine from the transaxle assembly. Refer to TM-68, "Exploded View".

INSTALLATION

Install in the reverse order of removal.

- Do not allow oil to get on mounting insulator. Be careful not to damage mounting insulator.
- When installation directions are specified, install parts according to the direction marks on them referring to components illustration.
- Make sure that each mounting insulator is seated properly, and tighten mounting bolts and nuts.

Inspection

INFOID:0000000001060483

INSPECTION AFTER INSTALLATION

- Before starting engine check the levels of coolant, lubrications and working oils. If less than required quantity, fill to the specified level.
- Before starting engine, bleed air from fuel piping. Refer to FL-23, "Air Bleeding".
- Run engine to check for unusual noise and vibration.
- Warm up engine thoroughly to make sure there is no leakage of coolant, lubricants, working oil, fuel and exhaust gas.
- Bleed air from passages in pipes and tubes of applicable lines.

cardiagn.com

DISASSEMBLY AND ASSEMBLY

ENGINE STAND SETTING

Setting

INFOID:0000000001063231

Before the engine is mounted on the engine sub-attachment, the engine's electrical harness must be removed and the engine oil drained.

1. Remove the drive belt. Refer to EM-259, "Removal and Installation".
2. Remove the alternator.
3. Remove the air conditioning compressor.
4. Remove the multifunction support.

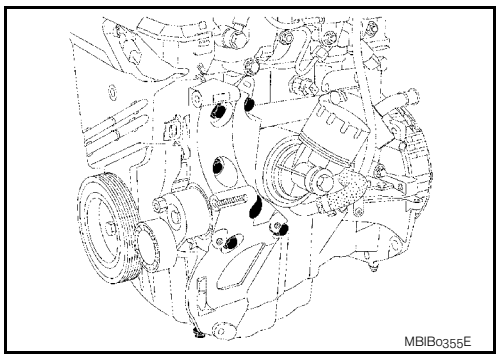

5. Remove the coolant inlet pipe on the water pump.

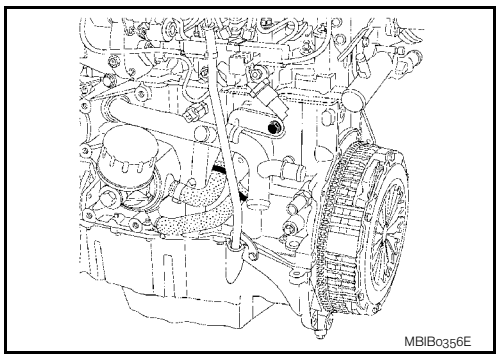

6. Place the rods (**A**), (**X**), (**Y**) on the cylinder block.

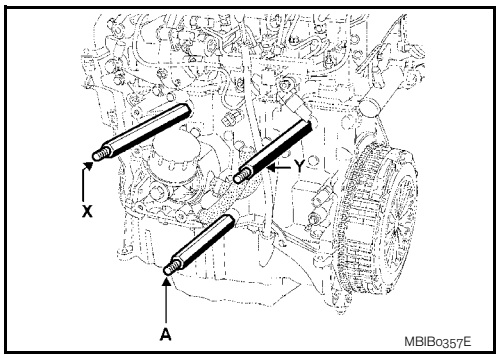

cardiagn.com

CYLINDER HEAD

Exploded View

INFOID:0000000001063235

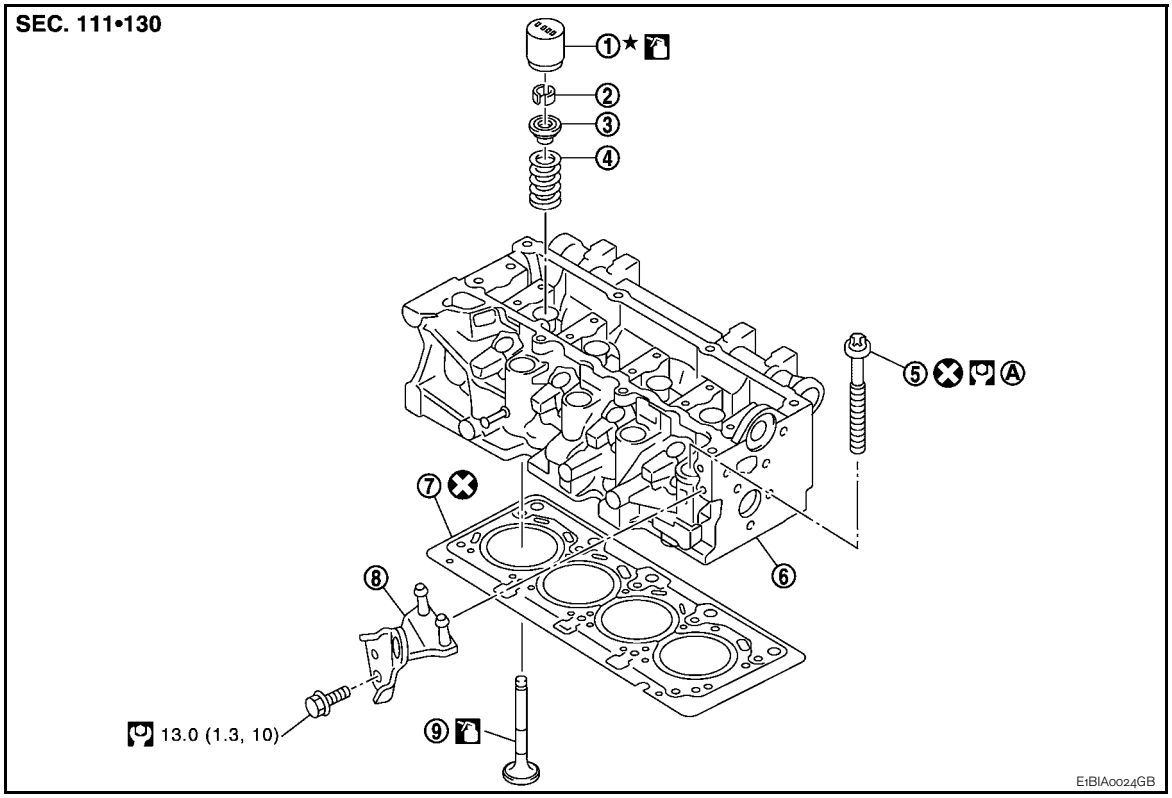

1.	Valve lifter	2.	Valve collet	3.	Valve spring retainer
4.	Valve spring	5.	Cylinder head bolt	6.	Cylinder head
7.	Cylinder head gasket	8.	Engine slinger	9.	Valve

A. 25.0 N·m (2.6 kg-m, 18ft-lb) and 255 degrees

Refer to GI-4, "Components" for symbols in the figure.

Removal and Installation

INFOID:0000000001063266

REMOVAL

1. Remove the following parts.
   - Engine cover: Refer to EM-266, "Removal and Installation".
   - Air inlet tube: Refer to EM-268, "Removal and Installation".
   - Rocker cover: Refer to EM-285, "Removal and Installation".
   - Injectiontube and fuel injector: Refer to EM-277, "Removal and Installation".
   - High pressure supply pump: EM-283, "Removal and Installation".
   - Exhaust monifold: Refer to EM-273, "Removal and Installation".
   - Tming belt: Refer to EM-287, "Removal and Installation".
   - Camshaft: Refer to EM-294, "Removal and Installation".

cardiagn.com

2. Remove cylinder head bolts in reverse order as shown in the figure and remove cylinder head.
3. Remove cylinder head gasket.

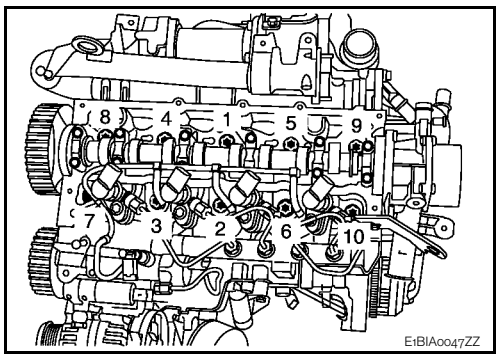

INSTALLATION

1. Position the pistons at mid-stroke.
2. Install new cylinder head gasket using the centering dowels of the cylinder block.
   NOTE:
   The gasket faces (cylinder head and rocker cover) must be clean, dry and free from grease (in particular, remove finger marks).
3. Install cylinder head and teghten cylinder head bolts in the numerical order as shown in the figure.

   : 25.0 N·m (2.6 kg-m, 18 ft-lb)

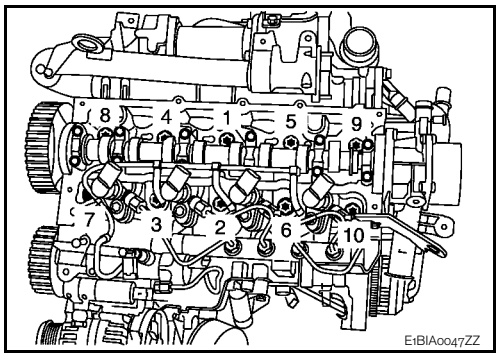

4. Turn all bolts 255 degrees clockwise (angle tightening) in the numerical order as shown in the figure.
   CAUTION:
   Check and confirm the tightening angle by using the angle wrench [SST: KV10112100 (—)] or protractor. Avoid judgment by visual inspection without the tool.
5. Install in the reverse order of removal after this step.

Disassembly and Assembly

INFOID:0000000001063267

DISASSEMBLY

1. Place the cylinder head on cylinder head stand [KV113B0200 (Mot. 1573) (commercial service tool) or equivalent tool].
   CAUTION:
   Pay strict attention to the rules regarding cleanliness. Refer to EM-249, "Precaution for Diesel Equipment".

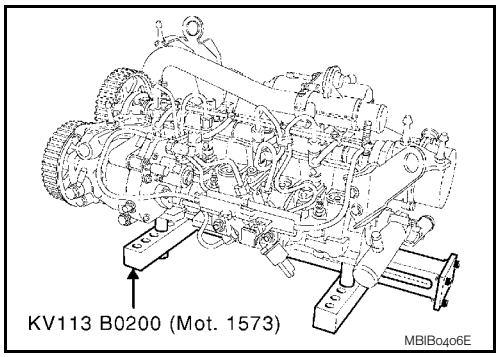

2. Remove high pressure supply pump and related parts. Refer to EM-277, "Removal and Installation".
3. Remove the injectors and glow plugs. Refer to EM-277, "Removal and Installation" and EM-275, "Removal and Installation".
4. Remove the vacuum pump and water outlet and thermostat assembly. Refer to EM-276, "Removal and Installation" and CO-62, "Removal and Installation".
5. Remove the front engine slinger, EGR assembly, air inlet pipe and exhaust manifold. Refer to EM-268, "Removal and Installation" and EM-273, "Removal and Installation".
6. Remove the camshaft sprocket. Refer to EM-287, "Removal and Installation".
7. Remove the camshaft brackets. Refer to EM-294, "Removal and Installation".

cardiagn.com

8. Remove the tappets, noting their position.

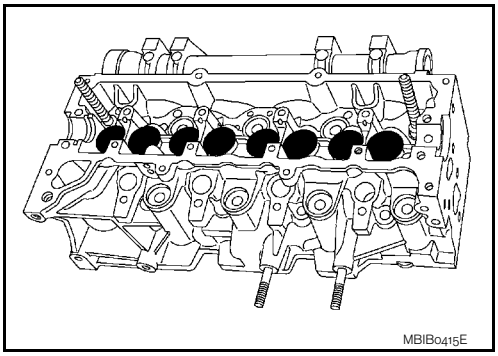

9. Compress the valve springs using the valve lifter.
   Remove the keys, upper cups and springs.

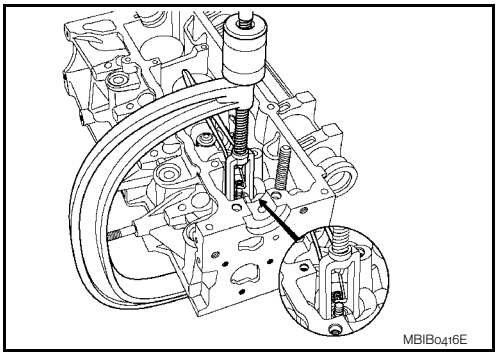

NOTE:
Before removing the valves and the valve stem seals, it is vital to measure position "H" of one of the old seals in relation to the cylinder head using valve seal drift [KV113B0180 (Mot. 1511-01) (commercial service tool) or equivalent tool].

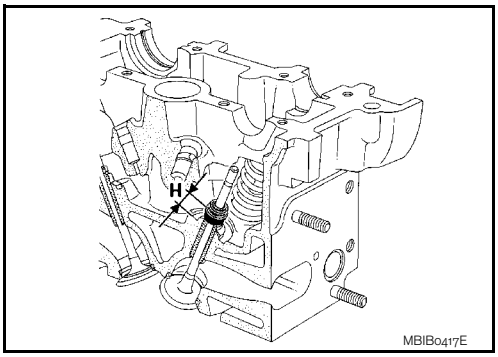

10. Install the push rod (A) of valve seal drift [KV113B0180 (Mot. 1511-01) (commercial service tool) or equivalent tool] on the valve stem seal.
    NOTE:
    The inner diameter of the push rod must be identical to that of the valve. In addition, the bottom of the push rod must come into contact with the metal upper section of the valve stem seal.

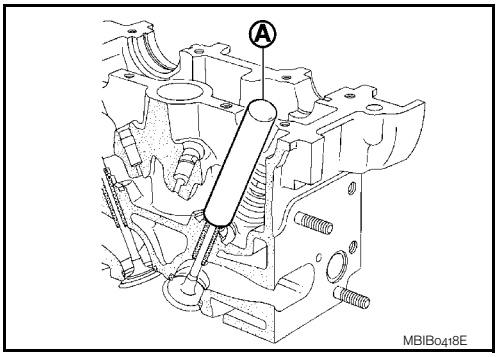

cardiagn.com

11. Install the guide tube (B) over the push rod until the guide tube comes into contact with the cylinder head, locking the push rod with the knurled wheel.
12. Remove the guide tube assembly plus push rod, being careful not to loosen the knurled wheel.
13. Remove the valves and valve guide seals using the valve seal remover [KV113B0090 (Mot. 1335) (commercial service tool) or equivalent tool].

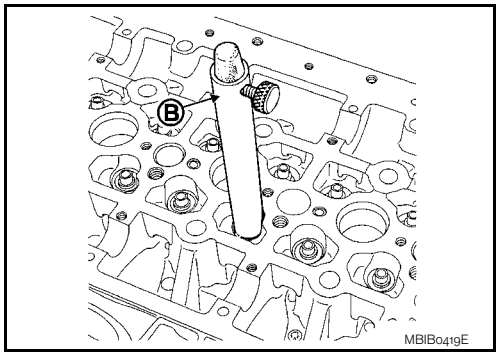

ASSEMBLY

1. Install new valves and grind them gently into their respective seats. Clean all the parts thoroughly, mark them for identification purposes, then carry out the refitting operation.
   Lubricate the inside of the valve guide.
   - It is imperative to fit the valve stem seals using valve seal drift [KV113B0180 (Mot. 1511-01) (commercial service tool) or equivalent tool].

   NOTE:
   Do not lubricate the valve stem seals before fitting them.
2. Place the valve in the cylinder head.

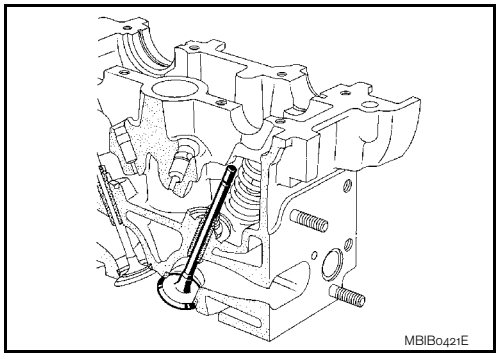

3. Place the barrel of valve seal drift [KV113B0180 (Mot. 1511-01) (commercial service tool) or equivalent tool] over the valve stem (the inner diameter of the barrel must be identical to the diameter of the valve stem).

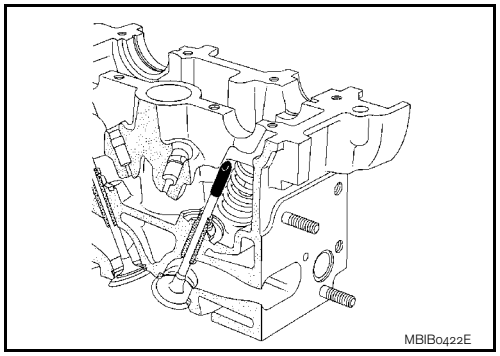

4. Keep the valve pressed against its seat.
5. Place the valve stem seal (not lubricated) over the tool barrel.

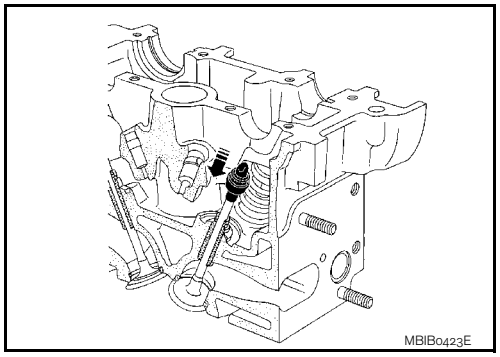

cardiagn.com

6. Push the valve stem seal past the tool barrel, then withdraw the barrel.

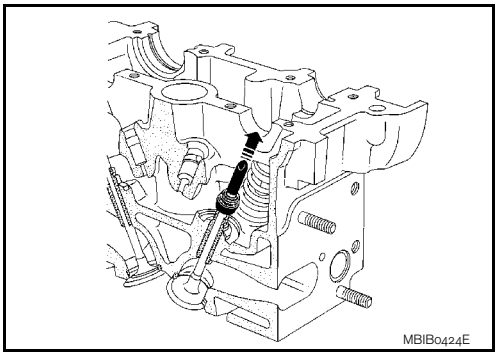

7. Place the guide tube plus push rod assembly on the valve stem seal.
8. Push the valve stem seal down by tapping the top of the sleeve with the palm of your hand until the guide tube touches the cylinder head.
9. Repeat these operations for all the valves.

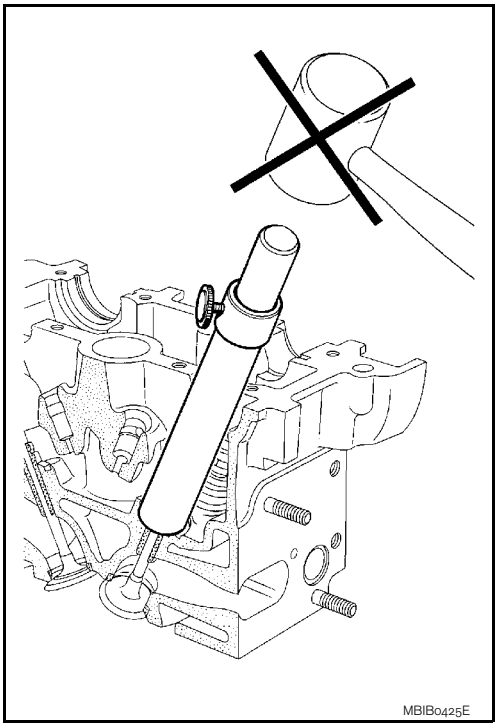

10. Install the valve springs and upper cups using valve spring compressor.
11. Install the keys using tweezers.
12. Install in the reverse order of removal after this step.

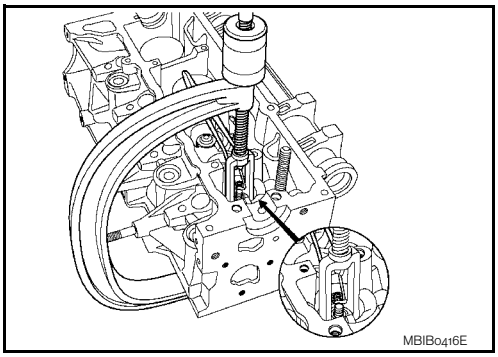

Cleaning

INFOID:0000000001063269

- It is very important not to scratch the gasket faces of any aluminium components.
- Use suitable tool to dissolve any part of the seal which remains stuck to the metal surface.
- Apply the dissolving product to the part to be cleaned, wait approximately 10 minutes, then remove it using a wooden spatula.
- Wear gloves while carrying out this operation.
- Do not allow this dissolving product to drip on to the paintwork.
- **Great care should be taken when performing this operation, to prevent foreign objects from entering the pipes taking oil under pressure to the camshafts (pipes in both the cylinder head and its cover) and the oil return pipes.**

cardiagn.com

- **Failure to follow these instructions could lead to the blocking of the oilways, resulting in rapid and serious damage to the engine.**

Inspection

INFOID:0000000001063238

INSPECTION AFTER REMOVAL

Cylinder Head Distortion

NOTE:
When performing this inspection, cylinder block distortion should be also checked. Refer to EM-241, "Cylinder Block".

1. Wipe off engine oil and remove water scale (like deposit), gasket, sealant, carbon, etc. with a scraper.
   CAUTION:
   Use utmost care not to allow gasket debris to enter passages for engine oil or water.
2. At each of several locations on bottom surface of cylinder head, measure the distortion in six directions using straightedge and feeler gauge.

   Limit : Refer to EM-331, "Cylinder Head".

   - If it exceeds the limit, replace cylinder head.

Cylinder Head Height

Measure the height of cylinder head (H).

Standard : Refer to EM-331, "Cylinder Head".

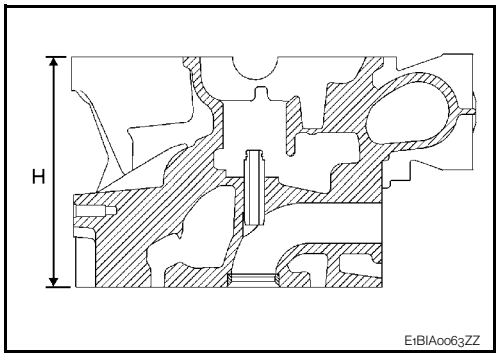

Valve protrusion

Check the valve protrusion using dial gauge stand set [KV113B0040 (Mot. 251-01) (commercial service tool) or equivalent tool] and dial gauge stand set [KV113B0050 (Mot. 252-01) (commercial service tool) or equivalent tool] as shown.

Standard : –0.07 to 0.07 mm (–0.0028 to 0.0028 in)

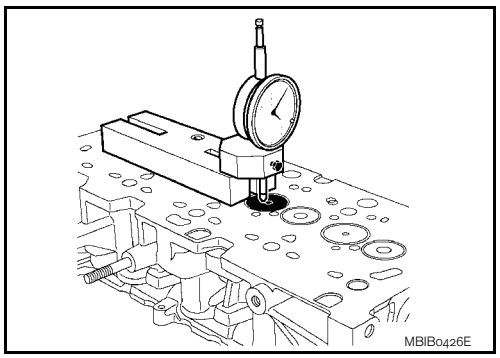

INSPECTION AFTER DISASSEMBLY

Valve

Measure the valves as follows.

- Stem daimeter (d)

Intake : Refer to EM-331, "Cylinder Head"
Exhaust : Refer to EM-331, "Cylinder Head"

- Face angle (α)

Intake : Refer to EM-331, "Cylinder Head"
Exhaust : Refer to EM-331, "Cylinder Head"

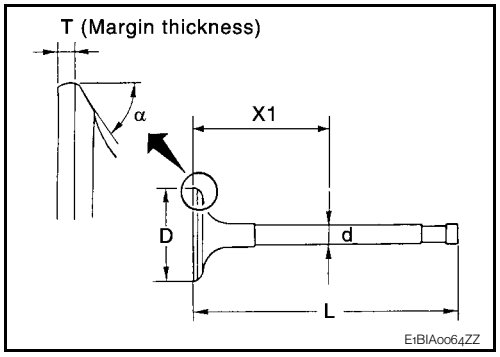

cardiagn.com

- Head diameter (D)

Intake : Refer to EM-331, "Cylinder Head"
Exhaust : Refer to EM-331, "Cylinder Head"

- Valve length (L)

Intake : Refer to EM-331, "Cylinder Head"
Exhaust : Refer to EM-331, "Cylinder Head"

- Valve margin (T)

Intake : Refer to EM-331, "Cylinder Head"
Exhaust : Refer to EM-331, "Cylinder Head"

Valve Seat
Measure the valve seats as follows.

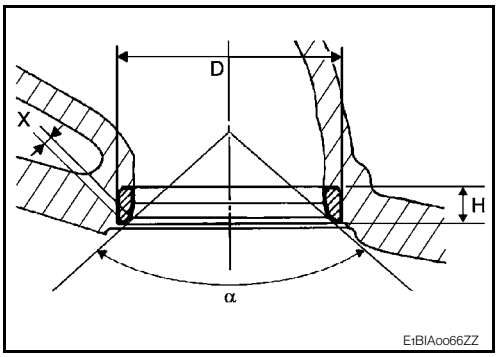

- Seat angle (α)

Intake : Refer to EM-331, "Cylinder Head"
Exhaust : Refer to EM-331, "Cylinder Head"

- Contacting width (X)

Intake : Refer to EM-331, "Cylinder Head"
Exhaust : Refer to EM-331, "Cylinder Head"

- Seat outer diameter (D):

Intake : Refer to EM-331, "Cylinder Head"
Exhaust : Refer to EM-331, "Cylinder Head"

- Cylinder head seat recess diameter (D)

Intake : Refer to EM-331, "Cylinder Head"
Exhaust : Refer to EM-331, "Cylinder Head"

Valve Guide Clearance

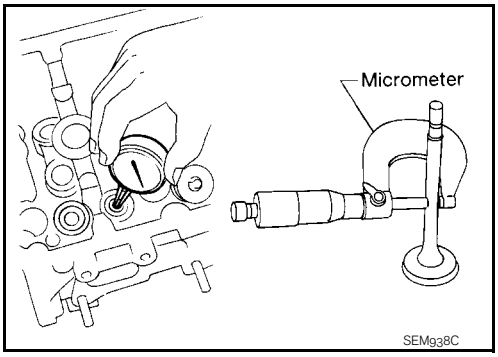

1. Measure diameter of valve stem with micrometer.
2. Measure inner diameter of valve guide with inside micrometer.
3. Calculate the valve guide clearance.
   (Valve guide clearance) = (Valve guide inner diameter) – (Valve stem diameter)

Intake : 0.020 - 0.050 mm (0.0008 - 0.0020 in)
Exhaust : 0.030 - 0.063 mm (0.0012 - 0.0025 in)

- If it exceeds the limit, replace and/or valve guide.

Valve Spring

cardiagn.com

Measure the valve spring as follows.

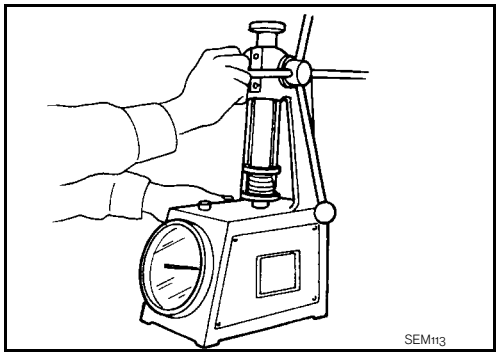

- Free height

Intake and exhaust : Refer to EM-331, "Cylinder Head"

- Length under load

Intake and exhaust : Refer to EM-331, "Cylinder Head"

- Full pressed height

Intake and exhaust : Refer to EM-331, "Cylinder Head"

- Wire diameter

Intake and exhaust : Refer to EM-331, "Cylinder Head"

- Inner diameter

Intake and exhaust : Refer to EM-331, "Cylinder Head"

- Outer diameter

Intake and exhaust : Refer to EM-331, "Cylinder Head"

- Squareness

Intake and exhaust : Refer to EM-331, "Cylinder Head"

cardiagn.com

CYLINDER BLOCK

Exploded View

INFOID:0000000001063240

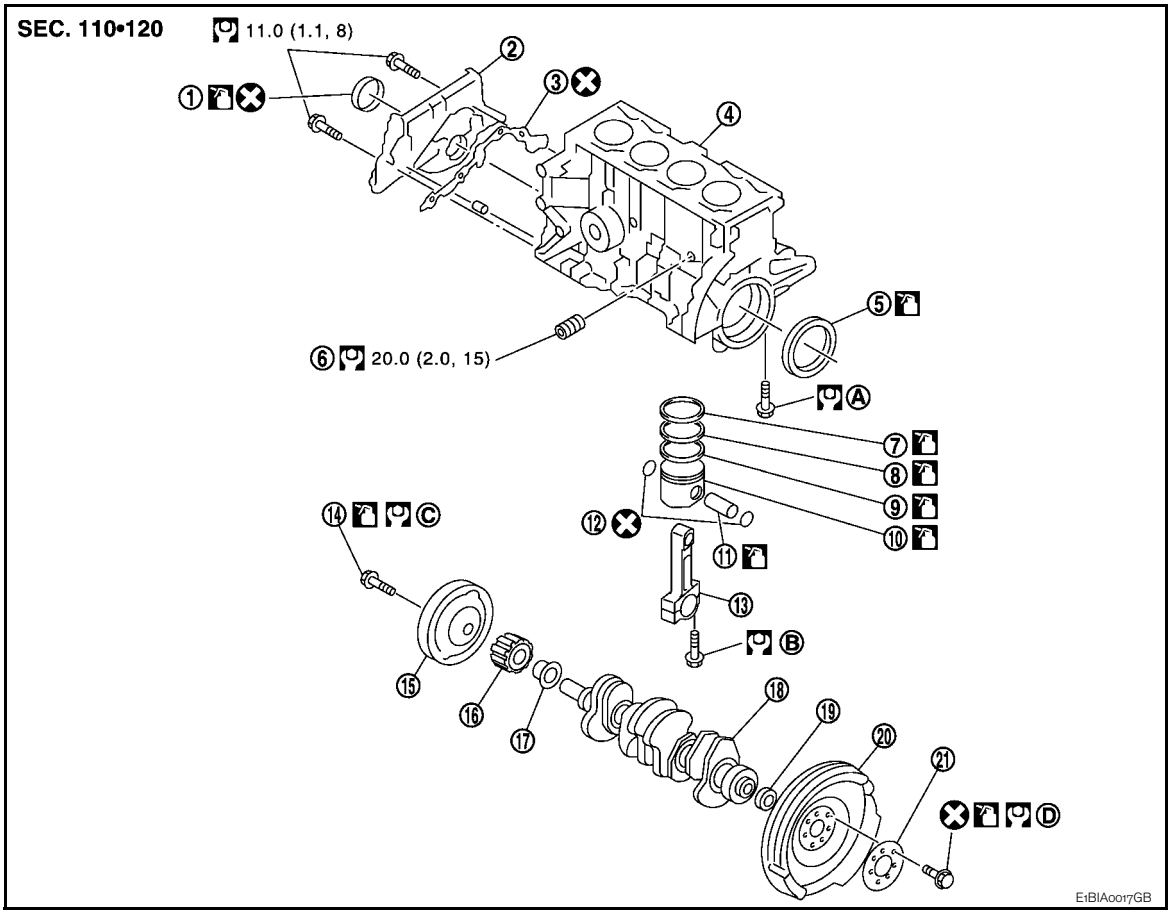

1.	Oil seal	2.	Crankshaft cover	3.	Gasket
4.	Cylinder block	5.	Oil seal	6	TDC pin plug
7.	Top ring	8.	Second ring	9.	Oil ring
10.	Piston	11.	Piston pin	12.	Snap ring
13.	Connecting rod	14.	Crankshaft pulley bolt	15.	Crankshaft pulley
16.	Crankshaft sprocket (timing belt)	17.	Crankshaft sprocket (oil pump drive chain)	18.	Crankshaft
19.	Pilot bushing	20.	Flywheel	21.	Reinforcement plate

A. 25.0 N·m (2.6 kg-m, 18 ft-lb) and 47 degrees
B. 20.0 N·m (2.0 kg-m, 15 ft-lb) and 45 degrees
C. 120.0 N·m (12 kg-m, 89 ft-lb) and 95 degrees
D. 20.0 N·m (2.0 kg-m, 15 ft-lb) and 36 degrees

Refer to GI-4, "Components" for symbols in the figure.

Disassembly and Assembly

INFOID:0000000001063268

DISASSEMBLY

cardiagn.com

1. Install the ring gear stopper [SST: KV113B0060 (Mot. 582-01)].
2. Remove the clutch housing.

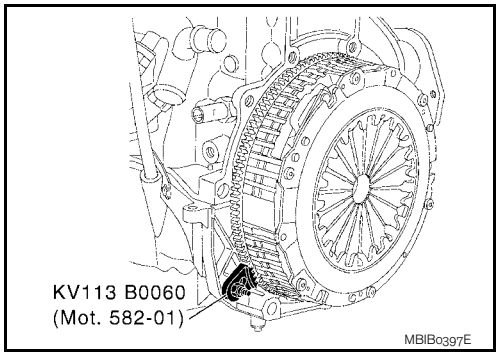

3. Remove the flywheel.

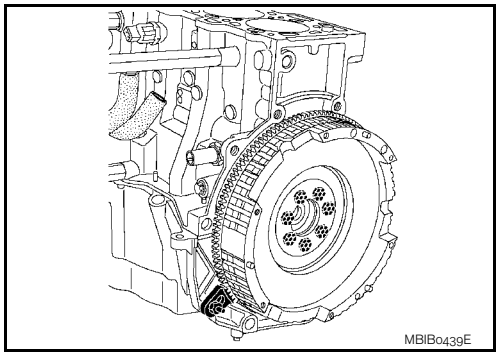

4. Remove the oil pan bolt in reverse order as shown.

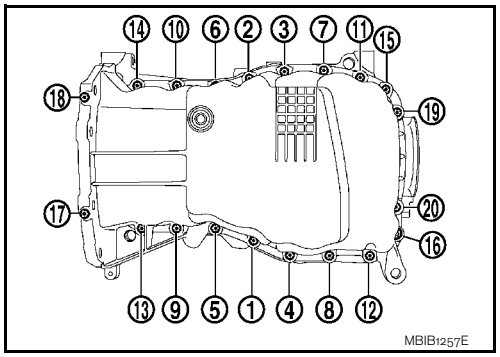

5. Remove the oil level sensor.
6. Remove the oil pump.

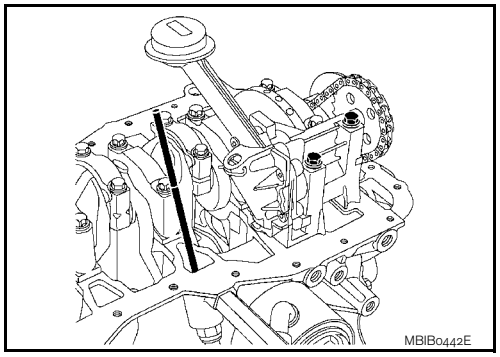

7. Remove the crankshaft cover.
8. Remove the water pump.

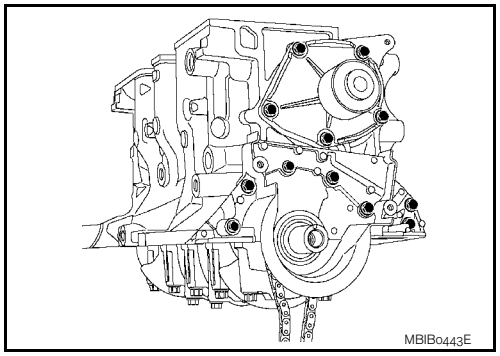

cardiagn.com

9. Remove the oil pump chain.
10. Remove the oil pump drive sprocket.

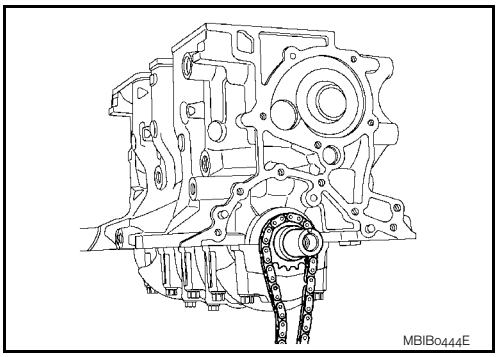

WARNING:
Do not use a sharp point to mark the bearing caps in relation to their connecting rods to avoid starting a crack in the rod. Use a permanent marker pen.

11. Remove the big end cap bolts and the connecting rod/piston assemblies.
    NOTE:
    It is essential to mark the position of the main bearing cap, as the category may be different for each bearing.
12. Remove the main bearing caps.
13. Remove the crankshaft.

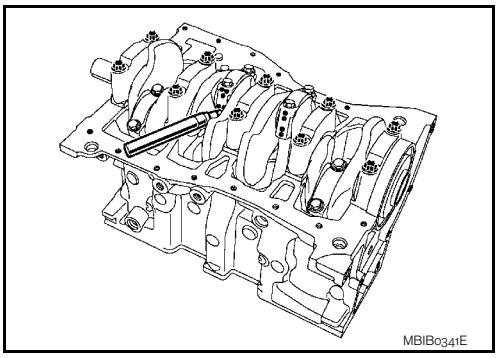

14. Remove the oil pressure switch, the knock sensor and oil filter bracket connecting bolt.

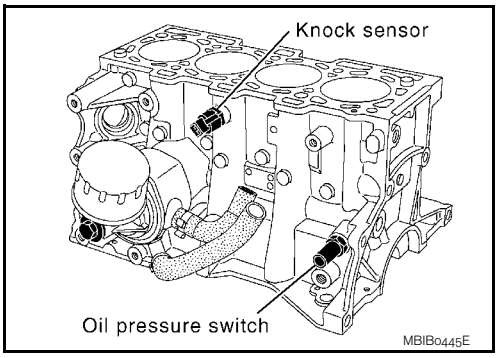

15. Remove the oil cooler connecting bolt.

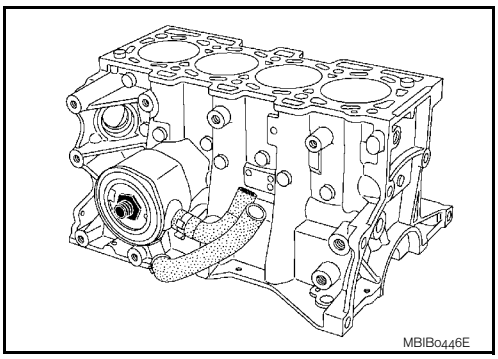

cardiagn.com

16. To remove the oil jets (A), they must be drilled with a 7 mm (0.28 in) diameter drill. This is necessary in order to remove the spring stop (B) and the spring (C).

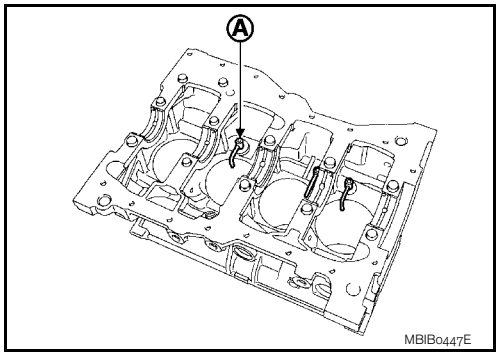

NOTE:
Do not remove the ball (D) to prevent from entering the cooling circuit.

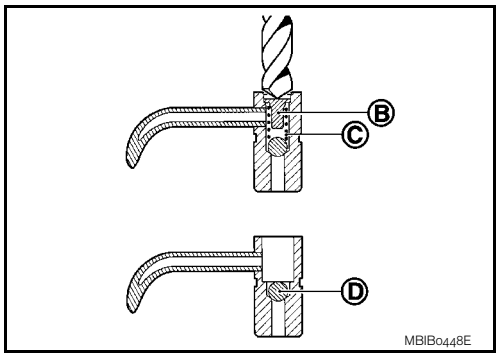

17. Remove the using a suitable brush.

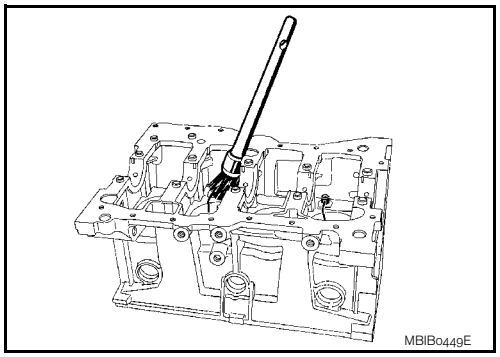

18. Screw oil jet remover [SST: KV113B0120 (Mot. 1485-01)] in the drilled out jets using a 6 mm (0.24 in) Allen key which must slide into the tool.

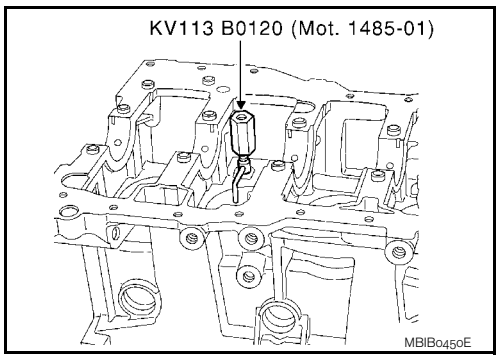

cardiagn.com

19. Screw sliding hammer [SST: KV113B0020 (Emb. 880)] onto oil jet remover [SST: KV113B0120 (Mot. 1485-01)] and remove the oil jet.

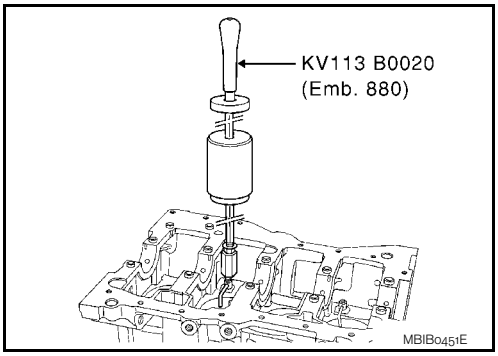

20. To remove the piston pin, remove the snap ring using a screwdriver, then release the pin.

Removing the Piston Pins

NOTE:

It is imperative to mark the connecting rod to match it to its piston, because the piston height classes in the same engine may be different (see Technical Specifications section).

ASSEMBLY

1. The oil jets must be installed using oil jet remover plate [SST: KV113B0170 (Mot. 1494)].
2. Install oil jets for NO. 1 and NO. 3 cylinders with the following procedure.

a. Install plate (A) of oil jet remover plate [SST: KV113B0170 (Mot. 1494)] onto the cylinder block (as shown in the figure) without tightening the two bolts (C).

b. Position the guide rod (B) in the plate (A) and the end of the guide rod in the hole of the oil jet to center the plate (A).

c. Tighten the two bolts (C).

d. Remove the guide rod.

e. Install the push rod instead of the guide rod, then insert the oil jet into the push rod.
NOTE:
Check that the oil jet is correctly oriented with the end of the jet (D) directed towards the center of the cylinder.

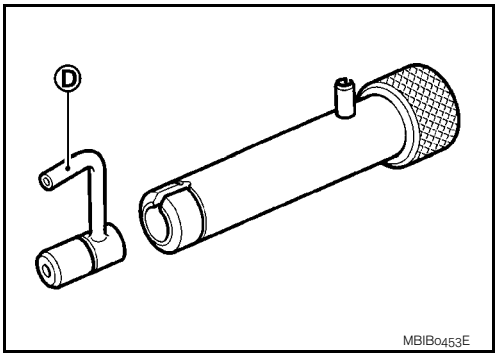

f. With a hammer, tap the push rod until the shoulder (E) of the push rod comes into contact with the plate (A).

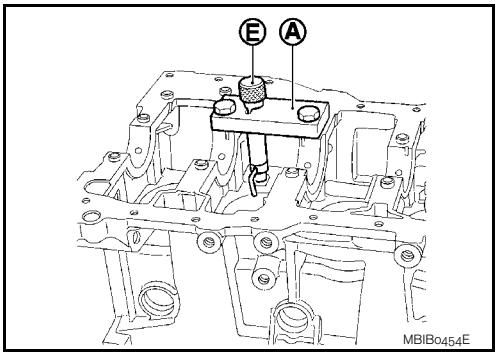

3. Install oil jets for NO. 1 and NO.4 cylinders with the following procedure.

cardiagn.com

a. Fit plate (A) of oil jet remover plate [SST: KV113B0170 (Mot. 1494)] onto the cylinder block (as shown in the figure) without tightening the two bolts (C).

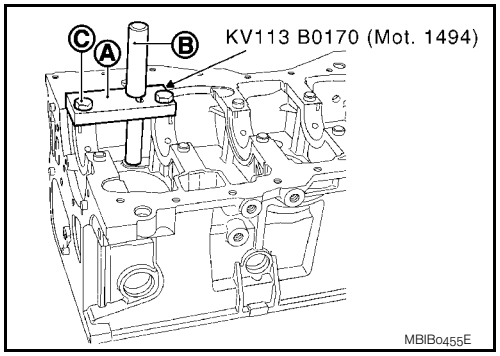

b. Position the guide rod (B) in the plate (A) and the end of the guide rod in the hole of the oil jet to center the plate (A).
c. Tighten the two bolts (C).
d. Remove the guide rod.
e. Position the push rod instead of the guide rod, then insert the oil jet into the push rod.
NOTE:
Check that the oil jet is correctly oriented with the end of the jet (D) directed towards the center of the cylinder.

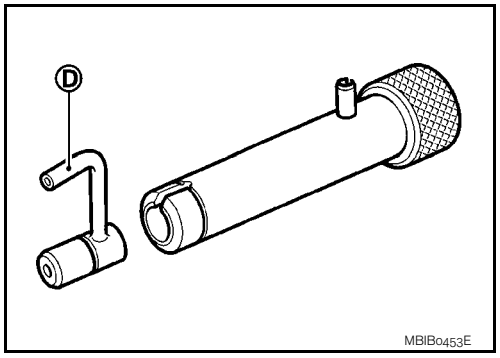

f. With a hammer, tap the push rod until the shoulder (E) of the push rod comes into contact with the plate (A).

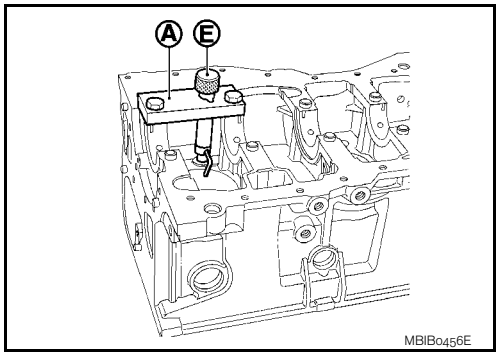

4. Check orientation of the oil jets (see diagram below).

A	Orientation of the oil jets of No. 2 and No. 4 cylinders
B	Orientation of the oil jets of No. 1 and No. 3 cylinders

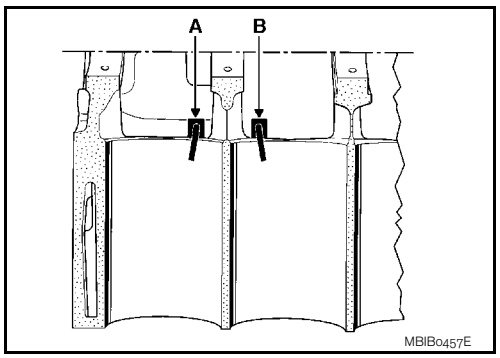

5. Clean the cylinder block and crankshaft by passing a wire through the lubrication channels.
6. Install oil level gauge guide tube.

7. Select main bearing with the following procedure.

cardiagn.com

a. Identify the category of crankshaft main journal diameter (A) with checking the marking of crankshaft as shown in the figure.
NOTE:
The marking has 5 digits. Left end is the diameter category of No. 1 bearing (flywheel side) and right end is the diameter category of No. 5 bearing (Sprocket side).

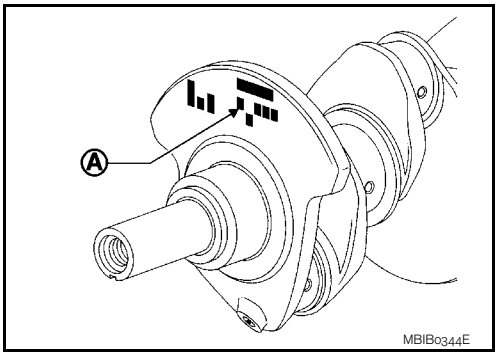

Journal diameter category mark	Journal diameter category [Diameter mm (in)]
A, G, K, R, W	D1 [47.990 - 47.997 (1.8894 - 1.8896)]
B, H, L, S, Y	D2 [47.997 - 48.003 (1.8896 - 1.8899)]
C, J, O, T, Z	D3 [48.003 - 48.010 (1.8899 - 1.8902)]

b. Identify the category of main bearing journal inner diameter on the cylinder block (A) with measuring the length between cylinder block top surface and drilled hole (B).

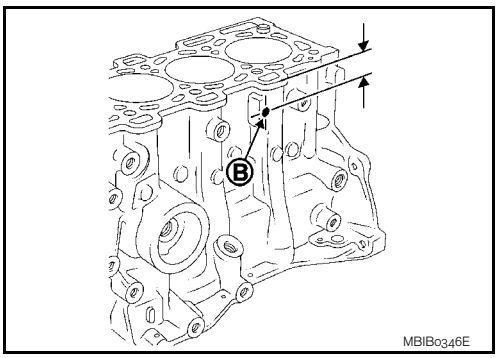

Position of (B)	Category marking [Inner diameter (A) mm (in)]
33 mm (1.30 in)	1 or Blue [51.936 - 51.942 (2.0447 - 2.0450)]
43 mm (1.69 in)	2 or Red [51.942 - 51.949 (2.0450 - 2.0452)]

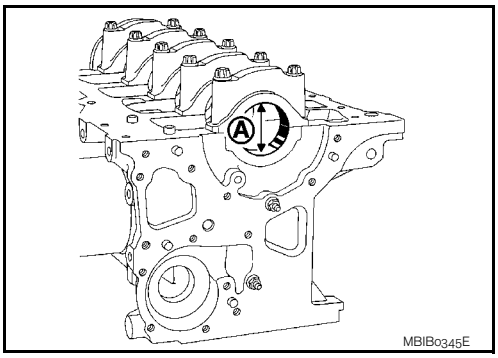

c. Select main bearing category by referring to the table.

Category of main bearing journal inner diameter on the cylinder block	Category of crankshaft main journal diameter	Main bearing category [Thickness mm (in)]
1 or Blue	D1	C1 (Yellow) [1.949 - 1.955 (0.0767 - 0.0770)]
	D2	C2 (Blue) [1.946 - 1.952 (0.0766 - 0.0769)]
	D3	C3 (Black) [1.943 - 1.949 (0.0765 - 0.0767)]
2 or Red	D1	C4 (Red) [1.953 - 1.959 (0.0769 - 0.0771)]
	D2	C1 (Yellow) [1.949 - 1.955 (0.0767 - 0.0770)]
	D3	C2 (Blue) [1.946 - 1.952 (0.0766 - 0.0769)]

cardiagn.com

8. Install main bearing with the following procedure.

a. Position the grooved main bearing on the cylinder block.

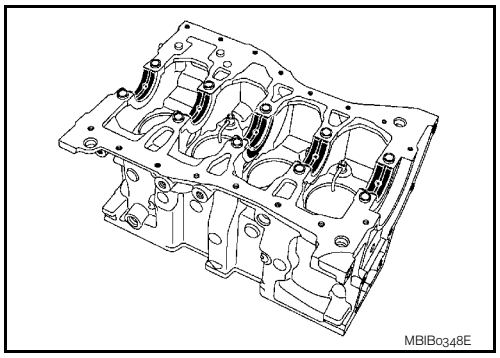

b. Install the smooth bearing cap on the bearings.

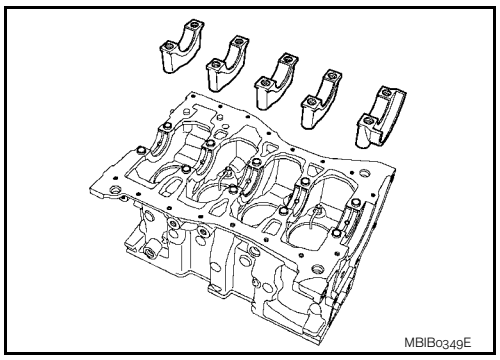

c. Position bearing insert [SST: KV113B0160 (Mot. 1493-01)] on the cylinder block.

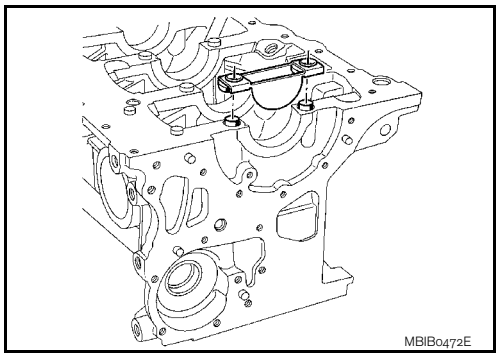

d. Install the bearing cap in bearing insert [SST: KV113B0160 (Mot. 1493-01)], then press at (A) until the bearing cap is touching at (B) with bearing insert.

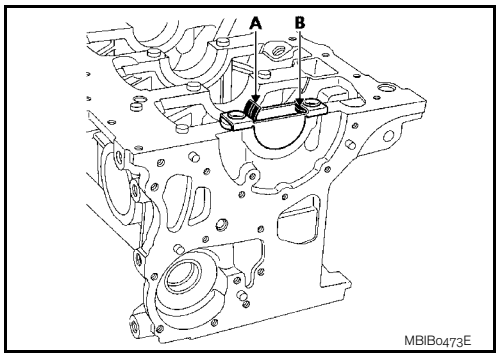

cardiagn.com

e. Position bearing insert [SST: KV113B0160 (Mot. 1493-01)] on the bearing cap.

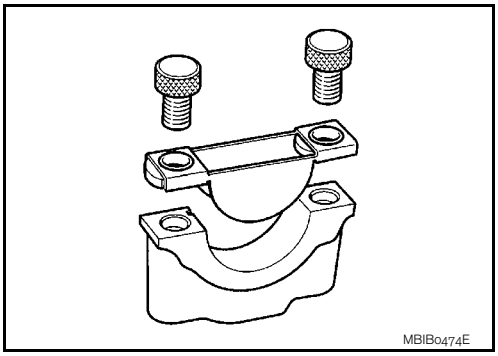

f. Install the main bearing in bearing insert [SST: KV113B0160 (Mot. 1493-01)], then press at (A) until the main bearing is touching at (B) with bearing insert.
g. Lubricate the main bearing with engine oil.
h. Install the crankshaft.
i. Install the lateral shims on bearing No. 3, putting the grooves on the crankshaft side.

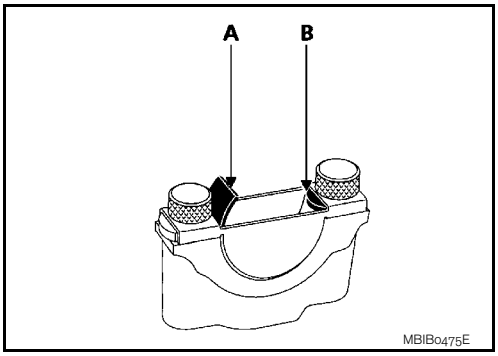

j. Degrease the gasket faces (of the cylinder block and bearing No. 1). They should be clean, dry and free from grease (in particular, remove finger marks).
k. Lay two beads of liquid sealant with a width of 4 mm (0.16 in) on bearing No. 1 of the cylinder block.

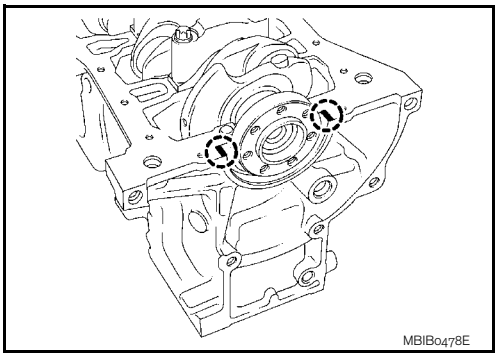

l. Install the main bearing caps on bearing cap No. 1 (these are numbered from 1 - 5 and these numbers should be positioned opposite the water pump). Then tighten the bolts to a torque of 25 N·m (2.6 kg-m, 18 ft-lb) plus an angle tightening of 47 degrees.

: 25.0 N·m (2.6 kg-m, 18 ft-lb)

m. Turn all bolts 47 degrees clockwise (angle tightening).
CAUTION:
Check and confirm the tightening angle by using the angle wrench [SST: KV10112100 (—)] or protractor. Avoid judgment by visual inspection without the tool.
n. Check the lateral play. Refer to EM-326, "Inspection".

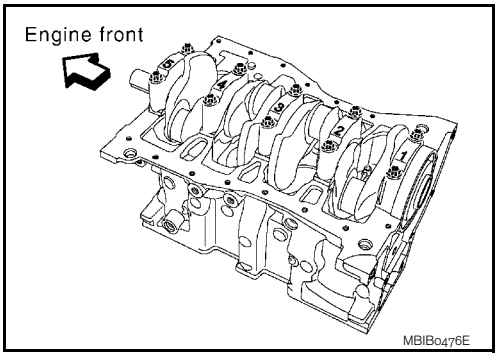

9. Install connecting rod bearing with the following procedure.

cardiagn.com

The connecting rod bearing are installed using bearing assembling set [SST: KV113B0140 (Mot. 1492)] and bearing assembling adapter [SST: KV113B0150 (Mot. 1492-03)].

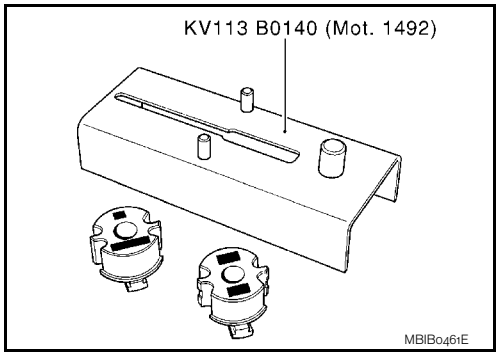

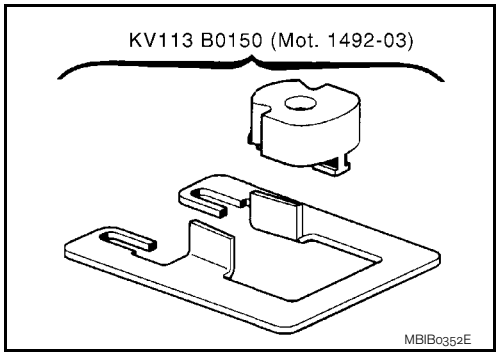

a. Slide the connecting rod bearing support (A) of bearing assembling adapter [SST: KV113B0150 (Mot. 1492-03)] (positioning the engraved mark (B) as shown in the figure)] into the groove (C) of the base of bearing assembling set [SST: KV113B0140 (Mot. 1492)].

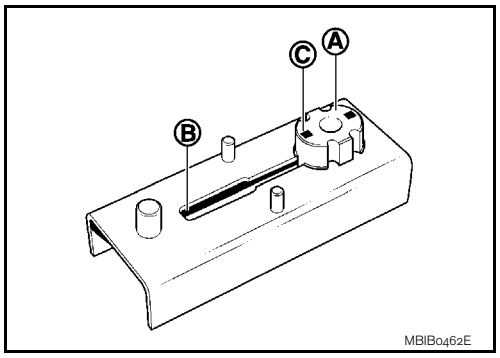

b. Install the guide (D) of bearing assembling adapter [SST: KV113B0150 (Mot. 1492-03)] onto the base (as shown in the figure).

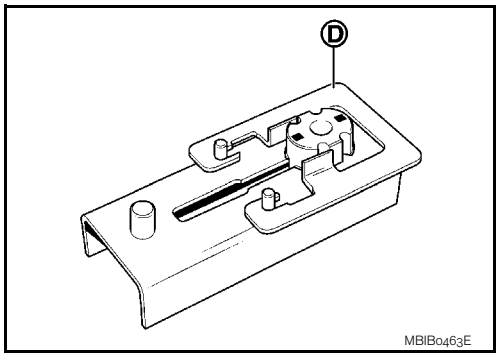

c. Lay the body of the connecting rod on the base of the tool (as shown in the diagram). Check that the lower part (E) of the small end is touching the centering pin and push the guide (G) in the direction of the arrow.

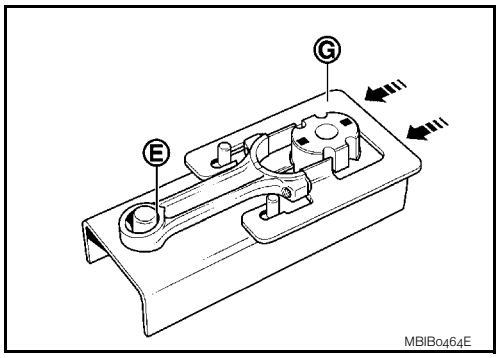

cardiagn.com

d. Lay the connecting rod bearing [with a width of 20.625 mm (0.8120 in)] (F) on the connecting rod bearing support, then push it in the direction of the arrow (as shown in the figure).

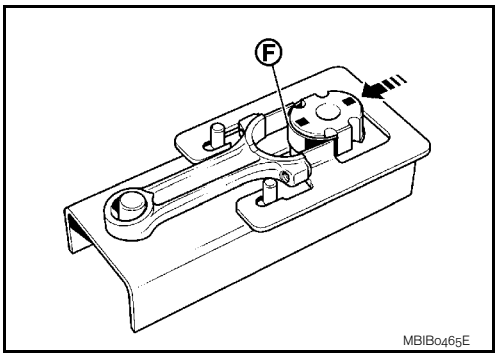

e. Bring the connecting rod support up against the base of the connecting rod body.

f. Remove the connecting rod body support and repeat the operation for the remaining connecting rod bodies.

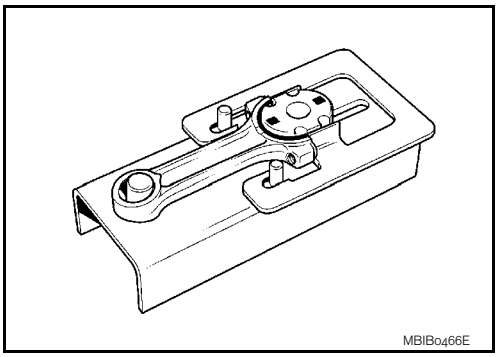

g. Position the connecting rod bearing support either on the engraved mark (C) if the width of the connecting rod bearing is equal to 20.625 mm (0.8120 in).

h. Position the connecting rod bearing support either on the engraved mark (D) if the width of the connecting rod bearing is equal to 17.625 mm (0.6939 in).

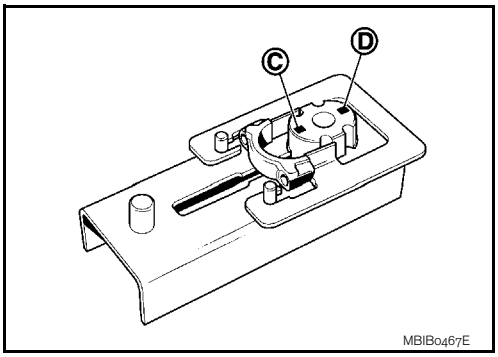

i. Install the connecting rod cap as shown in the figure.

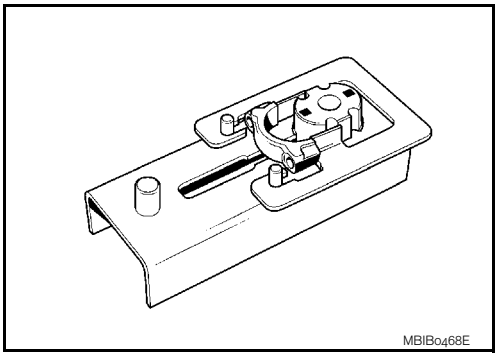

j. Push the guide (in the direction of the arrow) until the connecting rod cap is in contact with the pins (I) on the base of the tool.

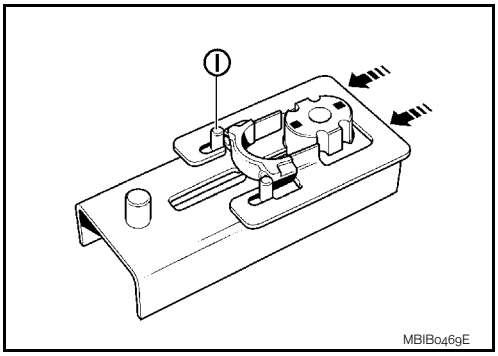

cardiagn.com

k. Install the connecting rod bearing (H) on the bearing support, then push it in the direction of the arrow (as shown in the figure).

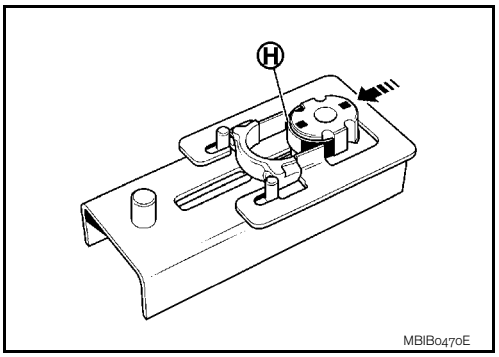

l. Bring the connecting rod bearing support up against the base of the connecting rod cap.

m. Remove the connecting rod bearing support and repeat the operation for the remaining connecting rod caps.

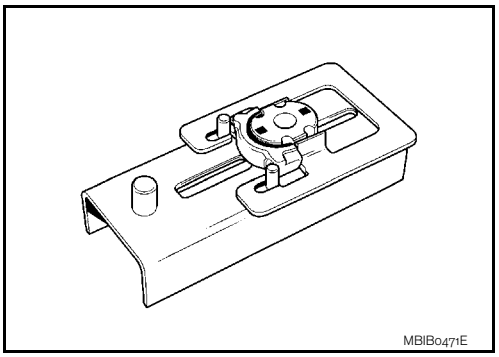

10. Assemble connecting rod and piston with the following procedure.

a. The pistons have a mark engraved on their heads indicating the engine rear side.
   - Oil the piston pin.
   - Check that the piston pins rotate correctly in the new piston and in the matching connecting rod.

b. Point the mark (A) engraved on the top of the piston upwards and the flat (B) of the big end downwards as shown in the figure.

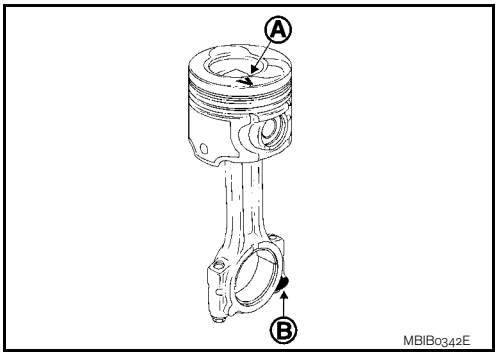

c. Position the opening (C) of the snap rings opposite the removal and fitting channel (D).

d. Install snap ring.
   - Rings set to their original adjustment must be free within their channels.
   - Ensure the snap rings are fitted the correct way, with the word TOP pointing upwards.

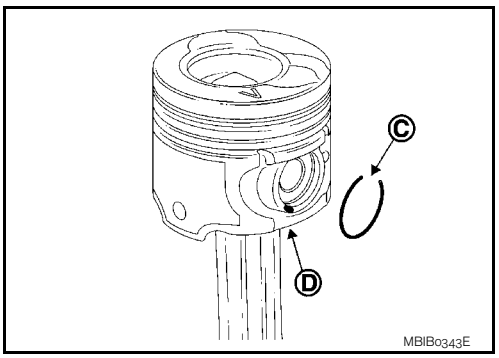

cardiagn.com

e. Ensure the break in each piston ring is correctly oriented as shown in the figure.

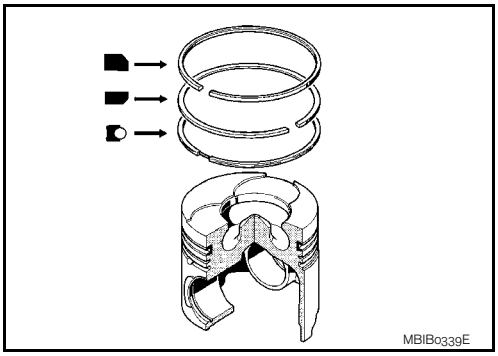

f. Apply new engine oil to the pistons.

g. Install the connecting rod/piston assemblies into the cylinder block using the ring, being careful to fit them the right way round (mark towards the flywheel).

h. Install the connecting rods onto the oiled crankshaft pins of the crankshaft.

i. Install the connecting rod caps, ensuring they are correctly matched.

j. Tighten the connecting rod cap bolts.

: 20.0 N·m (2.0 kg-m, 15 ft-lb)

k. Turn all bolts 45 degrees clockwise (angle tightening).
CAUTION:
Check and confirm the tightening angle by using the angle wrench [SST: KV10112100 (—)] or protractor. Avoid judgment by visual inspection without the tool.

l. Inspect that the big end lateral play. Refer to EM-326, "Inspection".

11. Install the oil pump sprocket and chain.

12. Tighten oil pump mounting bolts.

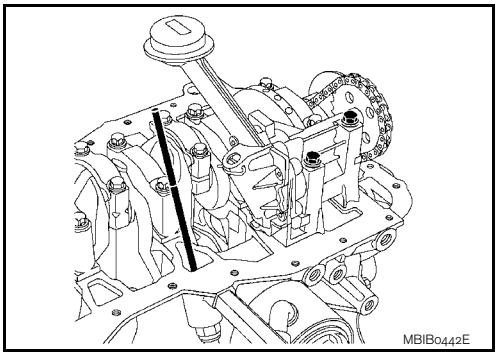

: 25.0 N·m (2.6 kg-m, 18 ft-lb)

13. Install water pump, Refer to CO-60, "Removal and Installation".
NOTE:
The gasket faces (cylinder block, crankshaft cover and water pump) must be clean, dry and free from grease (in particular, remove finger marks).

14. Install crankshaft cover oil seal with a new one.

15. Install the crankshaft cover in the numerical order as shown in the figure.

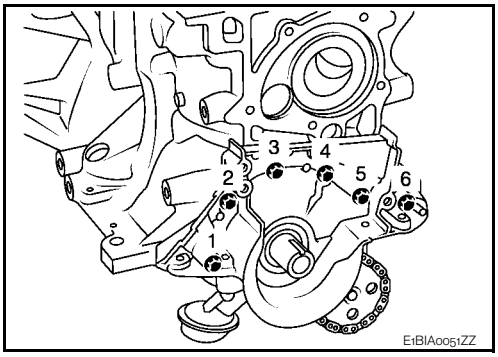

: 11.0 N·m (1.1 kg-m, 8 ft-lb)

16. Apply two beads (B) of liquid gasket, with a diameter of 5 mm (0.20 in).
Apply two points (C) of liquid gasket, with a diameter of 5 mm (0.20 in) at the intersection of the crankshaft cover and the cylinder block.
- Use Genuine Liquid Gasket or equivalent.

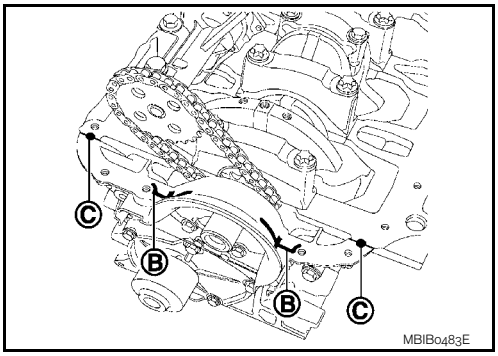

cardiagn.com

17. Apply two beads (B) of liquid gasket, with a diameter of 5 mm (0.20 in).
    - Use Genuine Liquid Gasket or equivalent.
18. Install the oil pan Refer to EM-280, "Removal and Installation".

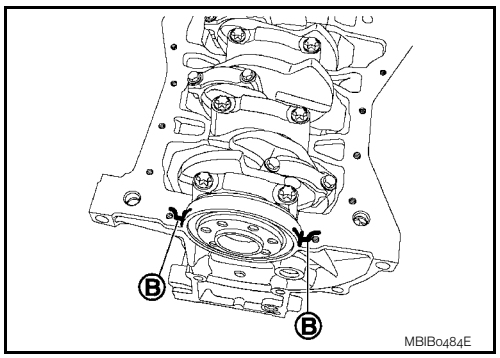

19. Crankshaft elastomer seal, timing side.
20. Screw the threaded rod (A) of front oil seal drift set [SST: KV113B0220 (Mot. 1586)] into the crankshaft.

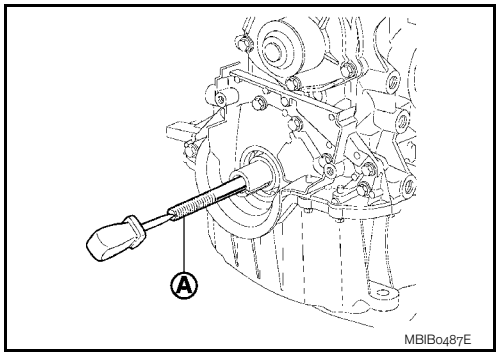

21. Position the spacer (B) of front oil seal drift set [SST: KV113B0220 (Mot. 1586)] on the crankshaft.

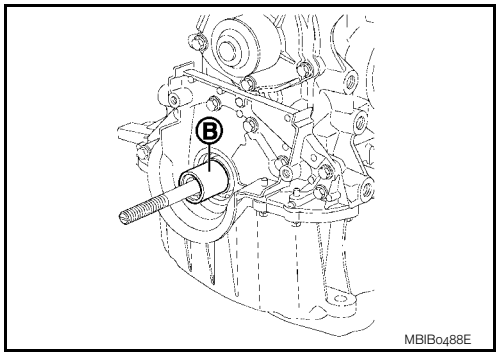

22. Install the protector complete with the seal onto the spacer, taking care not to touch the seal.

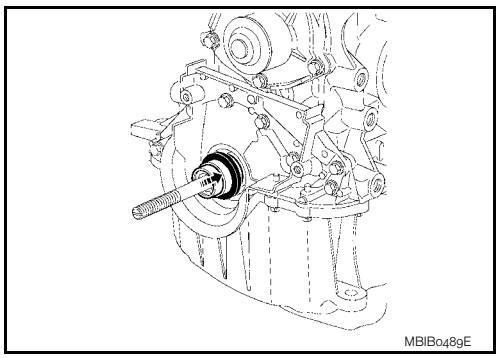

23. Install the cover (A) and the nut (B) (putting the threaded part (C) of the nut on the side away from the engine) of front oil seal drift set [SST: KV113B0220 (Mot. 1586)].

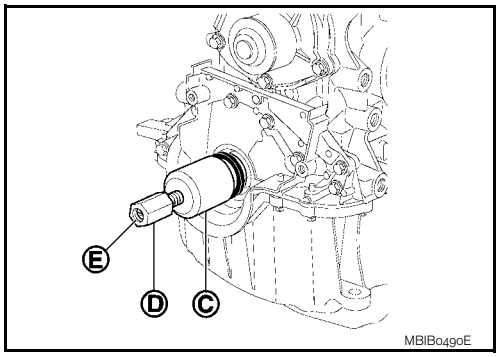

cardiagn.com

24. Tighten the nut until the cover touches the spacer.

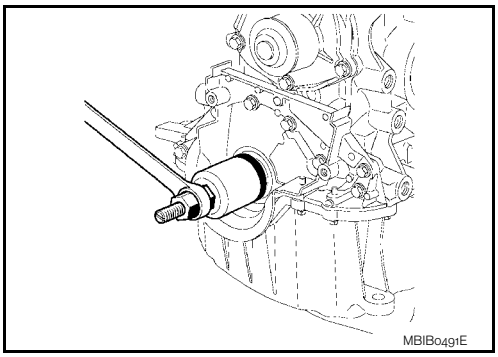

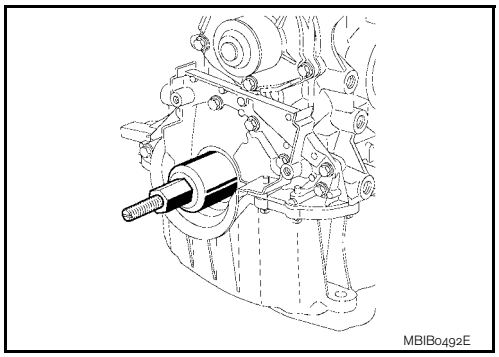

25. Remove the nut, the cover, the protector and the threaded rod.

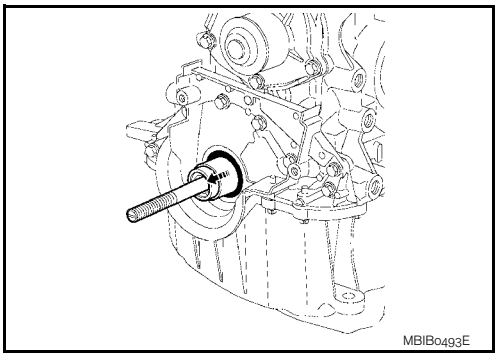

26. Crankshaft elastomer seal, flywheel side.
27. Install front oil seal drift set [SST: KV113B0210 (Mot. 1585)] on the crankshaft, securing it with bolts (F).

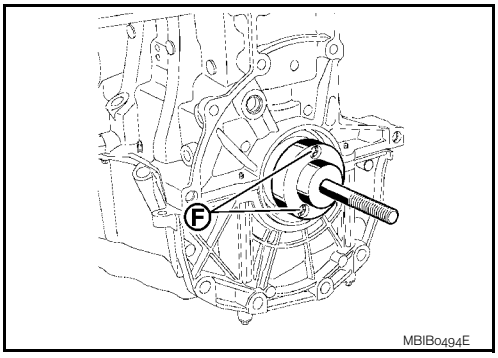

cardiagn.com

28. Put the protector complete with the seal on front oil seal drift set [SST: KV113B0210 (Mot. 1585)], being careful not to touch the seal.

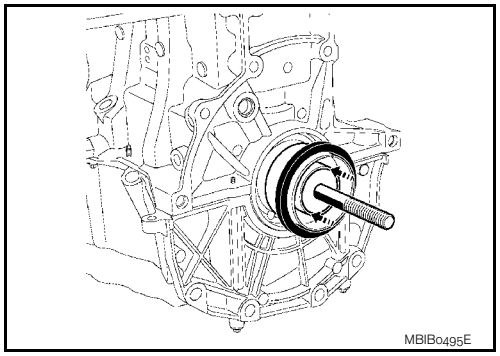

29. Install the cover (G) and nut (H) (putting the threaded part (I) of the nut on the side away from the engine) of front oil seal drift set [SST: KV113B0210 (Mot. 1585)].

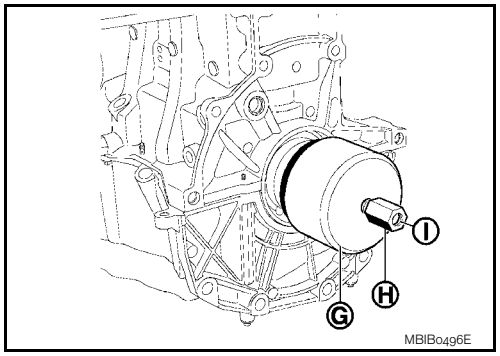

30. Tighten the nut until the cover touches the cylinder block.

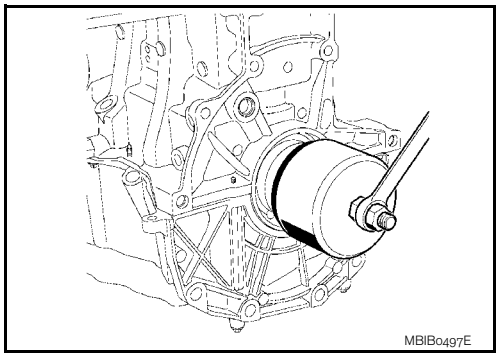

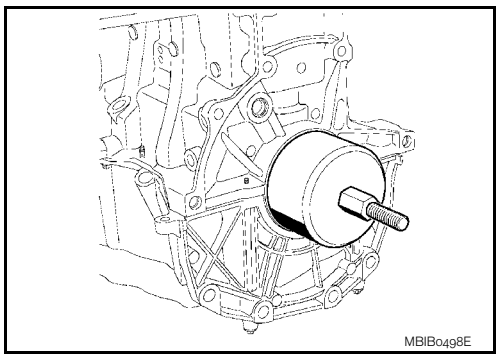

cardiagn.com

31. Remove the nut, the cover, the protector and the threaded rod.

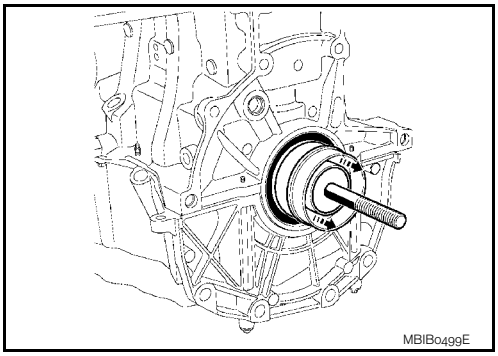

32. Install ring gear stopper [SST: KV113B0060 (Mot. 582-01)] and tighten flywheel bolts with new one.

: 20.0 N·m (2.0 kg-m, 15 ft-lb)

33. Turn all bolts 36 degrees clockwise (angle tightening).
CAUTION:
Check and confirm the tightening angle by using the angle wrench [SST: KV10112100 (—)] or protractor. Avoid judgment by visual inspection without the tool.
34. Install the clutch housing. Refer to CL-18, "K9K : Removal and Installation".
35. Remove ring gear stopper [SST: KV113B0060 (Mot. 582-01)].

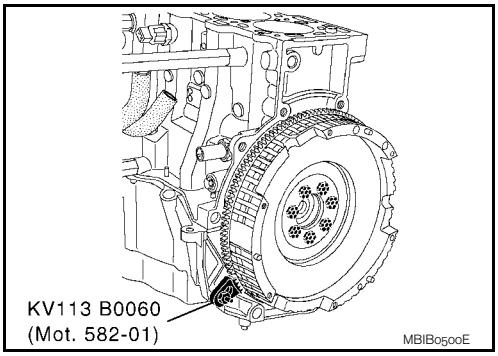

Inspection

INFOID:0000000001063244

CYLINDER BLOCK TOP SURFACE DISTORTION

- Using a scraper, remove gasket on the cylinder block surface, and also remove engine oil, scale, carbon, or other contamination.
CAUTION:
Be careful not to allow gasket flakes to enter engine oil or engine coolant passages.
- Measure the distortion on the cylinder block upper face at some different points in six directions with a straight edge (A) and feeler gauge (B).

Limit : Refer to EM-333, "Cylinder Block".

- If it exceeds the limit, replace cylinder block.

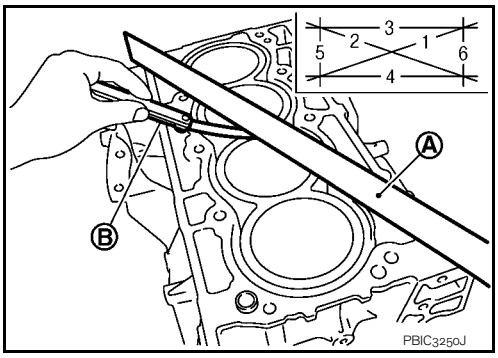

PISTON PROTRUSION

1. Clean the piston head.
2. Turn the crankshaft one turn in its operating direction to bring piston No. 1 close to TDC.
3. Install dial gauge stand set [KV113B0050 (Mot. 252-01) (commercial service tool) or equivalent tool] on the piston.
4. Install dial gauge stand set [KV113B0040 (Mot. 251-01) (commercial service tool) or equivalent tool] equipped with a gauge on dial gauge stand set [KV113B0050 (Mot. 252-01) (commercial service tool) or equivalent tool], and find TDC.
NOTE:
All measurements must be carried out along the longitudinal axis of the engine, in order to eliminate any errors due to tilting of the piston.

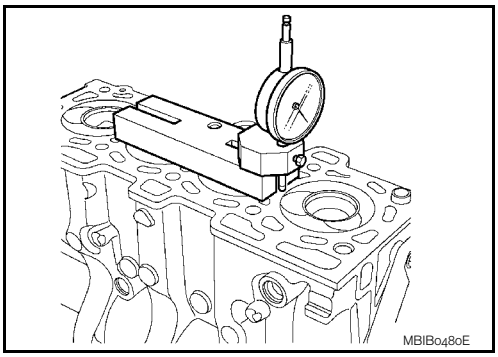

cardiagn.com

WARNING:
The gauge follower must not be in the valve clearance.

5. Inspect the piston protrusion.

Standard : **Refer to EM-333, "Cylinder Block".**

CRANKSHAFT LATERAL PLAY

1. Install crankshaft.
2. Inspect the lateral play.

Standard : **Refer to EM-333, "Cylinder Block".**

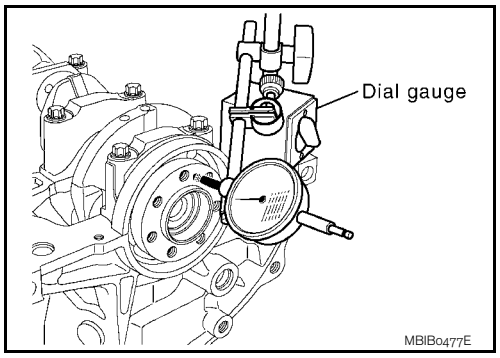

CONNECTING ROD BIG END LONGITUDINAL PLAY

1. Install crankshaft.
2. Install piston and connecting rod assembly.
3. Inspect that the big end lateral play.

Standard : **Refer to EM-333, "Cylinder Block".**

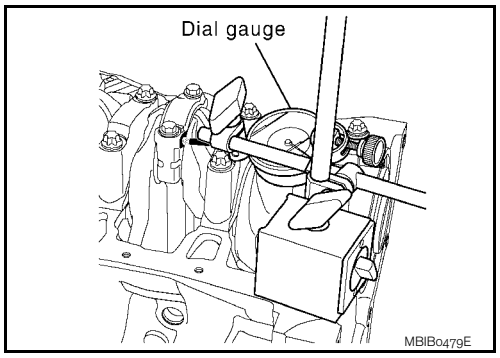

PISTON DIAMETER

Measure the piston diameter.
The piston diameter (A) must be measured at height (a) = 56 mm (2.205 in).

Standard : **Refer to EM-333, "Cylinder Block".**

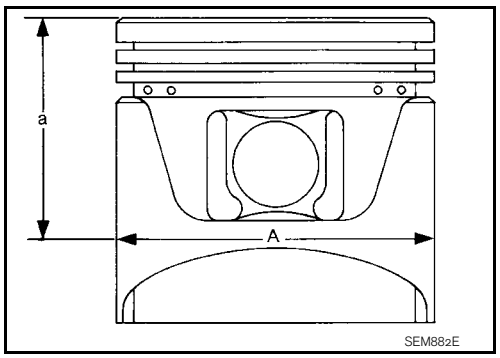

PISTON RING THICKNESS

Measure piston ring thickness with micrometer.

Standard : **Refer to EM-333, "Cylinder Block".**

- The piston rings are supplied ready adjusted.

PISTON RING SIDE CLEARANCE

cardiagn.com

- Measure the side clearance of piston ring and piston ring groove with a feeler gauge (A).

Standard : Refer to EM-333, "Cylinder Block".

- If the measured value exceeds the limit, replace piston ring, and measure again. If it still exceeds the limit, replace piston also.

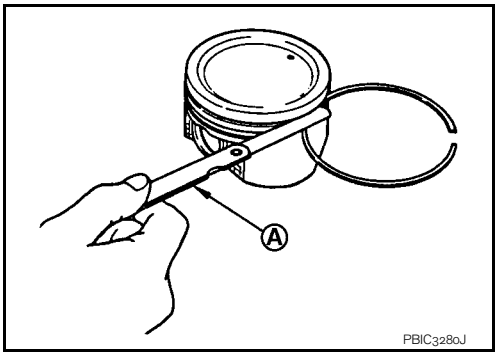

PISTON RING END GAP

- Lubricate with new engine oil to piston (1) and piston ring (2), and then insert (A) piston ring until middle of cylinder (B) with piston, and measure piston ring end gap with a feeler gauge (C).

Standard : Refer to EM-333, "Cylinder Block".

- If the measured value exceeds the limit, replace piston ring.

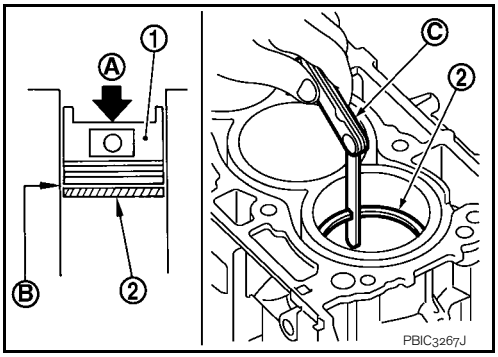

CRANKSHAFT MAIN JOURNAL DIAMETER

Use micrometer to measure crankshaft main journal diameter.

Standard : Refer to EM-333, "Cylinder Block".

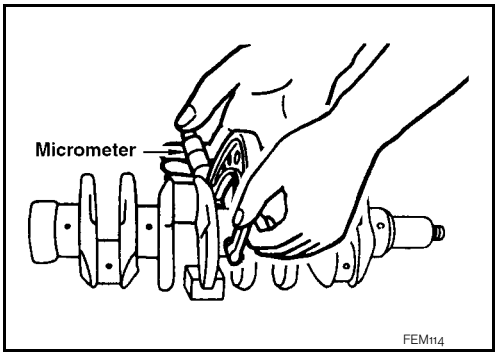

CRANKSHAFT PIN JOURNAL DIAMETER

Use micrometer to measure crankshaft pin journal diameter.

Standard : Refer to EM-333, "Cylinder Block".

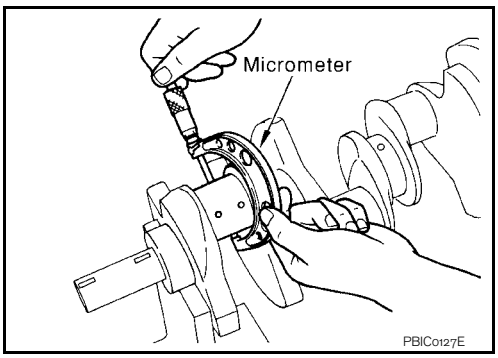

cardiagn.com

SERVICE DATA AND SPECIFICATIONS (SDS)

SERVICE DATA AND SPECIFICATIONS (SDS)

General Specification

INFOID:0000000001094019

GENERAL SPECIFICATIONS

Cylinder arrangement		In-line 4
Displacement cm^3 (cu in)		1.461 (89.15)
Bore and stroke mm (in)		76 x 80.5 (2.99 x 3.17)
Valve arrangement		SOHC
Firing order		1-3-4-2
Number of piston rings	Compression	2
	Oil	1
Number of main bearings		5
Compression ratio		15.3
Compression pressure kPa (bar, kg/cm^2, psi)		Maximum pressure must be at least 1,800 (18, 18.36, 261)

Valve timing

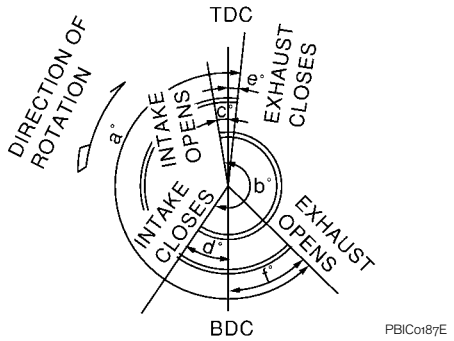

a	b	c	d	e	f
200°	191°	-9°	20°	-7°	27°

Drive Belt

INFOID:0000000001094020

DRIVE BELT

Tension of drive belt	Auto adjustment by auto-tensioner

Camshaft

INFOID:0000000001094024

CAMSHAFT

Unit: mm (in)

Items		Standard
Camshaft bracket inner diameter	No. 1, 2, 3, 4, 5	25.04 - 25.06 (0.9858 - 0.9866)
	No. 6	28.04 - 28.06 (1.1039 - 1.1047)
Camshaft journal diameter	No. 1, 2, 3, 4, 5	24.979 - 25.000 (0.9834 - 0.9843)
	No. 6	27.979 - 28.000 (1.1015 - 1.1024)
Camshaft end play		0.080 - 0.178 (0.0031 - 0.0070)
Camshaft runout		Less than 0.05 (0.0020)

cardiagn.com

Items		Standard
Camshaft cam height “A”	Intake	43.985 - 44.045 (1.7317 - 1.7341)
	Exhaust	44.565 - 44.625 (1.7545 - 1.7569)

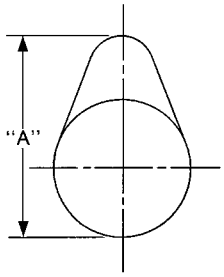

SEM671

VALVE LIFTER

Unit: mm (in)

Items	Standard
Valve lifter outer diameter	34.965 - 34.985 (1.3767 - 1.3774)
Valve lifter hole diameter	35.000 - 35.040 (1.3780 - 1.3795)
Valve lifter clearance	0.015 - 0.075 (0.0006 - 0.0030)

VALVE CLEARANCE

Unit: mm (in)

Items	Cold
Intake	0.125 - 0.250 (0.0049 - 0.0098)
Exhaust	0.325 - 0.450 (0.0128 - 0.0177)

AVAILABLE VALVE LIFTER

Unit: mm (in)

Part number	Thickness
13229BN700	7.550 (0.2972)
13229BN701	7.575 (0.2982)
13229BN702	7.600 (0.2992)
13229BN703	7.625 (0.3002)
13229BN704	7.650 (0.3012)
13229BN705	7.675 (0.3022)
13229BN706	7.700 (0.3031)
13229BN707	7.725 (0.3041)
13229BN708	7.750 (0.3051)
13229BN709	7.775 (0.3061)
13229BN710	7.800 (0.3071)
13229BN711	7.825 (0.3081)
13229BN712	7.850 (0.3091)
13229BN713	7.875 (0.3100)
13229BN714	7.900 (0.3110)
13229BN715	7.925 (0.3120)
13229BN716	7.950 (0.3130)
13229BN717	7.975 (0.3140)

cardiagn.com

Part number	Thickness
13229BN718	8.000 (0.3150)
13229BN719	8.025 (0.3159)
13229BN720	8.050 (0.3169)
13229BN721	8.075 (0.3179)
13229BN722	8.100 (0.3189)
13229BN723	8.125 (0.3199)
13229BN724	8.150 (0.3209)

Cylinder Head

INFOID:0000000001094025

CYLINDER HEAD

Unit: mm (in)

Items	Standard
Cylinder head gasket thickness	0.68 - 0.74 (0.0269 - 0.0291)
Head surface distortion	Less than 0.05 (0.002)
Normal cylinder head height “H”	127 (5.000)

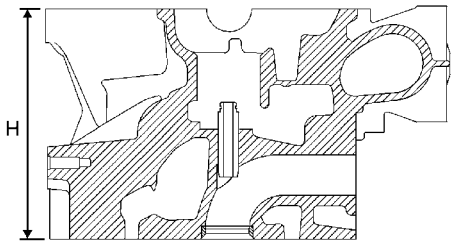

E1BIA0063ZZ

VALVE DIMENSIONS

Items			Standard
Valve head diameter “D”	mm (in)	Intake	33.38 - 33.62 (1.314 - 1.324)
		Exhaust	28.88 - 29.12 (1.137 - 1.146)
Valve length “L”	mm (in)	Intake	100.74 - 101.16 (3.9661 - 3.9827)
		Exhaust	100.54 - 100.96 (3.9583 - 3.9748)
Valve stem diameter “d”	mm (in)	Intake	5.969 - 5.985 (0.2350 - 0.2356) Measuring point (X1) is 41 (1.61)
		Exhaust	5.955 - 5.971 (0.2344 - 0.2351) Measuring point (X1) is 41 (1.61)
Valve seat angle “α”	degree		45°00′ (45.00°)
Valve margin “T”	mm (in)		1.0 (0.039)

cardiagn.com

Items			Standard
Valve lift	mm (in)	Intake	8.0 (0.315)
		Exhaust	8.6 (0.339)

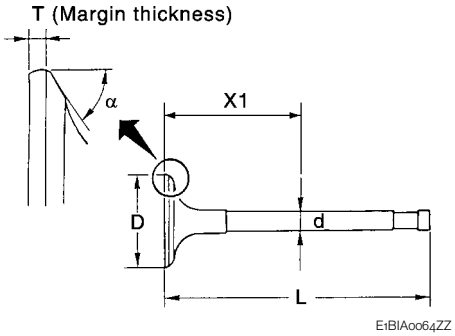

VALVE GUIDE

Items			Standard
Valve guide	mm (in)	Length	40.35 - 40.65 (1.5886 - 1.6004)
		Outer diameter	10.956 - 11.062 (0.4313 - 0.4355)
		Inner diameter (Finished size)	6.000 - 6.018 (0.2362 - 0.2369)
Cylinder head valve guide hole diameter	mm (in)		11.0 (0.4431)
Valve guide clearance	mm (in)	Intake	0.020 - 0.050 (0.0008 - 0.0020)
		Exhaust	0.030 - 0.063 (0.0012 - 0.0025)
Projection length “A”	mm (in)	Intake	14.0 (0.5512)
		Exhaust	14.2 (0.5591)
Valve guide inclination angle “a”	degree		90°00′ (90.00°)

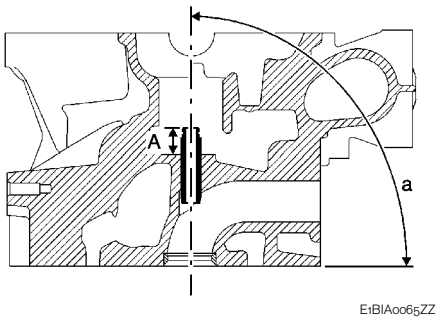

VALVE SEAT

Items			Standard
Cylinder head seat recess diameter “D”	mm (in)	Intake	34.444 - 34.474 (1.3561 - 1.3572)
		Exhaust	29.955 - 29.985 (1.1793 - 1.1805)
Valve seat outer diameter “D”	mm (in)	Intake	34.534 - 34.550 (1.3596 - 1.3602)
		Exhaust	30.035 - 30.048 (1.1825 - 1.1830)
Angle “α”	degree		89°30′ (89.50°)
Contacting width “X”	mm (in)		1.8 (0.071)
Valve seat height “H”	mm (in)	Intake	4.61 - 4.69 (0.1815 - 0.1846)
		Exhaust	5.63 - 5.71 (0.2217 - 0.2248)

cardiagn.com

Items		Standard
Cylinder head seat recess depth “H” mm (in)	Intake	6.0 (0.236)
	Exhaust	7.0 (0.276)

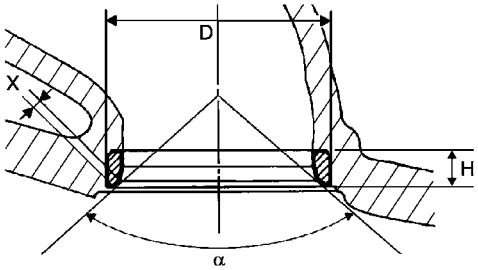

E1BIAoo66ZZ

VALVE SPRING

Items		Standard
Free height	mm (in)	43.31 (1.7051)
Pressure	N (kg, lb) at height mm (in)	218 - 242 (22.2 - 24.7, 49.0 - 54.4) at 33.80 (1.3307)
		477 - 523 (48.7 - 53.3, 107.2 - 117.6) at 24.80 (0.9764)
Spring squareness	mm (in)	1.2 (0.047)
Full pressed height	mm (in)	23.40 (0.9213)
Diameter of wire	mm (in)	3.45 (0.1358)
Outer diameter at the top of spring	mm (in)	20.8 - 21.2 (0.8189 - 0.8346)
Outer diameter at the bottom of spring	mm (in)	25.5 - 25.9 (1.0039 - 1.0197)
Inner diameter at the top of spring	mm (in)	13.9 - 14.3 (0.5472 - 0.5630)
Inner diameter at the bottom of spring	mm (in)	18.6 - 19.0 (0.7323 - 0.7480)

Cylinder Block

INFOID:0000000001094026

CYLINDER BLOCK

Unit: mm (in)

Items	Standard
Cylinder block top surface clearance	Less than 0.05 (0.002)

PISTON MARKING

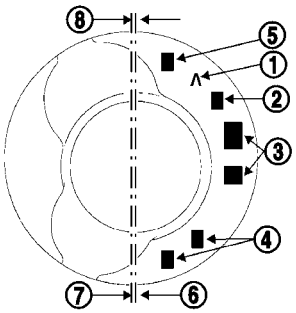

MBIBo337E

1	Direction of fitting of the piston mark towards the flywheel
2	Height between the piston pin and the top of the piston (see table below).

cardiagn.com

3	Used by the supplier only
4	Used by the supplier only
5	Used by the supplier only
6	Piston axis of symmetry
7	Piston pin hole axis
8	Offset between the hole axis (7) and the piston's axis of symmetry (6) is 0.3 mm (0.012 in)

PISTON

Unit: mm (in)

Items			Standard
Piston skirt diameter “A”	mm (in)		75.938 - 75.952 (2.9897 - 2.9902)
“a” dimension	mm (in)		56.0 (2.205)
Piston pin hole diameter	mm (in)	Category J	41.605 - 41.646 (1.6380 - 1.6396)
		Category K	41.647 - 41.688 (1.6396 - 1.6413)
		Category L	41.689 - 41.730 (1.6413 - 1.6429)
		Category M	41.731 - 41.772 (1.6429 - 1.6446)
		Category N	41.773 - 41.814 (1.6446 - 1.6462)
“b” dimension	mm (in)		26.0 (1.024)
Capacity of combustion chamber	m ℓ (Imp fl oz)		19.71 - 20.21 (0.67 - 0.71)
Piston protrusion	mm (in)		0.030 - 0.288 (0.0012 - 0.113)

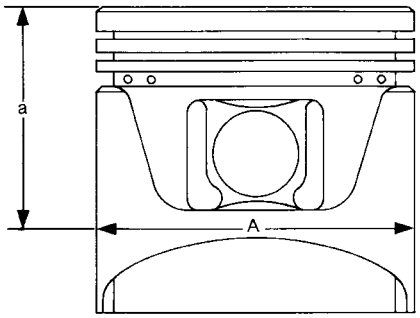

SEM882E

PISTON RING

Unit: mm (in)

Items		Standard
Thickness	Top	1.97 - 1.99 (0.0776 - 0.0783)
	2nd	1.97 - 1.99 (0.0776 - 0.0783)
	Oil ring	2.47 - 2.49 (0.0972 - 0.0980)
Side clearance	Top	0.10 - 0.12 (0.0039 - 0.0047)
	2nd	0.08 - 0.10 (0.0031 - 0.0039)
	Oil ring	0.03 - 0.05 (0.0012 - 0.0020)
Piston ring end gap	Top	0.20 - 0.35 (0.0079 - 0.0138)
	2nd	0.70 - 0.90 (0.0276 - 0.0354)
	Oil ring	0.25 - 0.50 (0.0098 - 0.0197)

PISTON PIN

Unit: mm (in)

Items	Standard
Length	59.7 - 60.0 (2.350 - 2.362)
Piston pin outer diameter	25.995 - 26.000 (1.0234 - 1.0236)

cardiagn.com

CONNECTING ROD

Unit: mm (in)

Items	Standard
Center distance	133.75 (5.266)
Connecting rod small end diameter (with bush)	26.013 - 26.025 (1.0241 - 1.0246)
Connecting rod big end diameter	47.610 - 47.627 (1.8744 - 1.8751)
Big end longitudinal play	0.205 - 0.467 (0.0081 - 0.0184)
Big end radial play	0.010 - 0.064 (0.004 - 0.025)

CRANKSHAFT

Unit: mm (in)

Items	Standard
Main journal diameter “Dm”	47.99 - 48.01 (1.8894 - 1.8902)
Pin journal diameter “Dp”	43.96 - 43.98 (1.7307 - 1.7315)
Maximum run-out allowed on the flywheel bearing face of the flywheel	0.6 (0.024)
Lateral play (without lateral shim)	0.045 - 0.252 (0.0018 - 0.0099)
Lateral play (with lateral shim)	0.045 - 0.852 (0.0018 - 0.0335)
Journal radial play	0.010 - 0.054 (0.0004 - 0.0021)

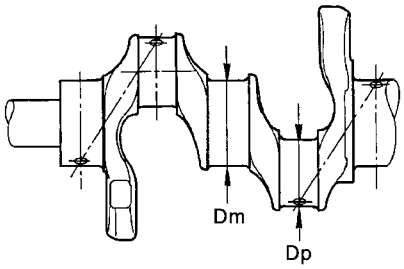

E1BIA0067ZZ

Turbocharger

INFOID:0000000001096242

Items		Standard
Regulation value operating vacuum	kPa (bar, kg/cm^2, psi)	50 (0.5, 0.51, 7.3)
Valve rod moving length	mm (in)	1.7 (0.067)

cardiagn.com